RELEASED FOR CONSTRUCTION
11-04-2009

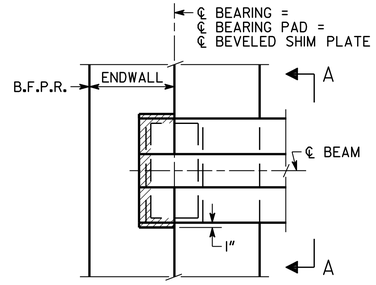


PLAN
BENT 1 SHOWN
BENT 4 SIMILAR

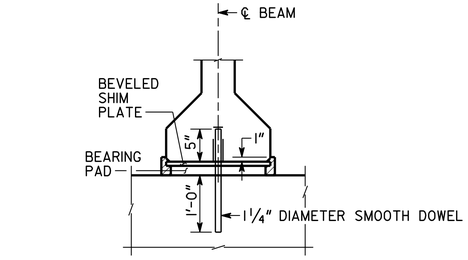


PREFORMED FOAM JOINT FILLER SHALL BE IN ACCORDANCE WITH SUB-SECTION 833.2.10 OF THE GEORGIA DOT SPECIFICATIONS.

ENDWALL NOT SHOWN
SECTION A-A

## NOTES

1) BEARING PADS HAVE BEEN DESIGNED ACCORDING TO AASHTO SPECIFICATIONS DIVISION I, SECTION 14.6.6 AND SHALL BE FURNISHED IN ACCORDANCE WITH AASHTO SPECIFICATIONS DIVISION II, SECTION 18, BEARINGS.

2) 1 1/4" DIAMETER SMOOTH DOWELS SHALL BE ASTM A 709 GRADE 36.

3) BEARING PADS SHALL BE MADE OF 60 DUROMETER HARDNESS NEOPRENE, GRADE 2 OR HIGHER.

4) 3" DIAMETER HOLE IN BEARING PADS MAY BE FORMED OR DRILLED.

5) BEARING PADS SHALL HAVE 1/4" COVER ON THE TOP, BOTTOM, AND SIDES AND AROUND THE HOLE.

6) 3/16" LOAD PLATES AND 14 GAGE INTERNAL PLATE(S) (IF REQUIRED) SHALL BE ASTM A 709 GRADE 36 OR ASTM A 1011 GRADE 36.

7) NUMBER OF INTERNAL PLATES SHOWN FOR ILLUSTRATION PURPOSES ONLY. THE NUMBER OF INTERNAL PLATE(S) SPECIFIED SHALL BE EQUALLY SPACED BETWEEN LOAD PLATES.

8) USE OF 1 1/2° MOLD DRAFT IS OPTIONAL.

9) BEVELED SHIM PLATES SHALL BE ASTM A 709 GRADE 36 AND SHALL BE GALVANIZED IN ACCORDANCE WITH ASTM A 123.

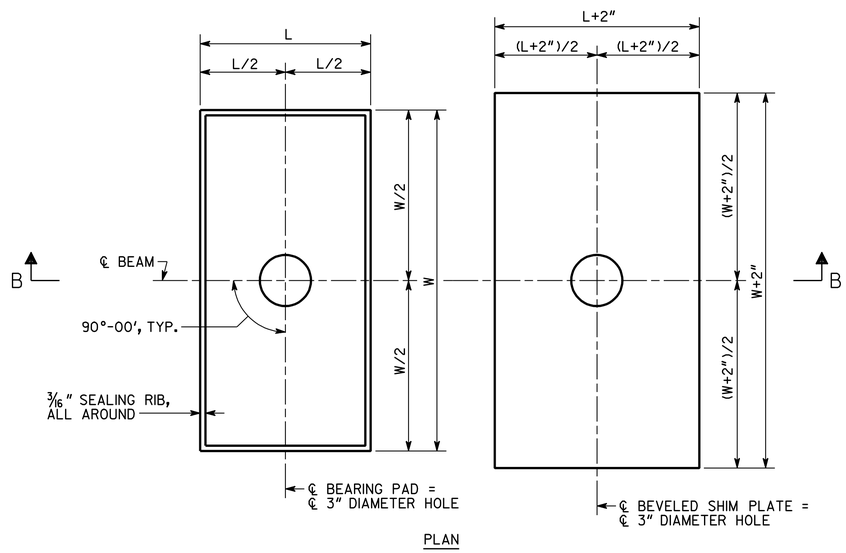


PLAN

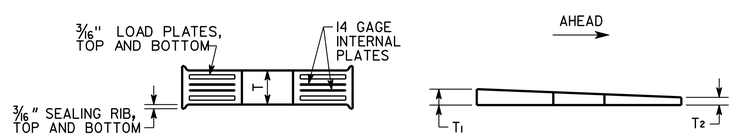


SECTION B-B

BEARING PAD

BEVELED SHIM PLATE

| BENT | BEAM | BEARING PADS | | | | | | | | BEVELED SHIM PLATES | |
|---|---|---|---|---|---|---|---|---|---|---|---|
| | | | | | | | DESIGN LOADS (KIPS) | | | | |
| | | W | L | T | NUMBER OF INTERNAL PLATE(S) | DESIGN SHEAR DEFLECTION | DEAD LOAD | LIVE LOAD (NO IMPACT) | DEAD LOAD + LIVE LOAD | T1 | T2 |
| 1 | ALL | 22" | 12" | 2 3/4" | 3 | 0.77" | 158.09 | 49.36 | 207.45 | 11/16" | 1/4" |
| 2BK | ALL | 22" | 12" | 2 3/4" | 3 | 0" | 158.09 | 49.36 | 207.45 | 11/16" | 1/4" |
| 2AH | ALL | 22" | 12" | 1 3/4" | 1 | 0" | 136.10 | 46.00 | 182.10 | 15/16" | 1/4" |
| 3BK | ALL | 22" | 12" | 2 3/4" | 3 | 0.68" | 136.10 | 46.00 | 182.10 | 15/16" | 1/4" |
| 3AH | 2-19 | 18" | 12" | 2 1/8" | 2 | 0.68" | 72.26 | 43.82 | 116.08 | 11/16" | 1/4" |
| 3AH | 1, 20 | 22" | 12" | 1 7/8" | 1 | 0.68" | 77.96 | 37.68 | 115.64 | 11/16" | 1/4" |
| 4 | 2-19 | 18" | 12" | 2 7/8" | 3 | 1.09" | 72.26 | 43.82 | 116.08 | 11/16" | 1/4" |
| 4 | 1, 20 | 22" | 12" | 2 3/4" | 2 | 1.09" | 77.96 | 37.68 | 115.64 | 11/16" | 1/4" |

BRIDGE NO. 1

DRAWING NO. 35-14

THE LPA GROUP

THE LPA GROUP INCORPORATED
TRANSPORTATION CONSULTANTS
3595 ENGINEERING DRIVE
NORCROSS, GEORGIA 30092
(770) 263-9118

GEORGIA
DEPARTMENT OF TRANSPORTATION
PRECONSTRUCTION DIVISION-OFFICE OF BRIDGE DESIGN

BEARING DETAILS
HAMMOND DRIVE OVER SR 400
FULTON COUNTY CSNHS-0008-00(415)

NO SCALE NOVEMBER 2009

| DATE | REVISIONS | BY |
|---|---|---|

BRIDGE SHEET 14 OF 25

DESIGNED ANZ | CHECKED AWB | REVIEWED WEI/WMD
DRAWN BSB | DESIGN GROUP ACB | APPROVED PVL