STATE	PROJECT NUMBER	SHEET NO.	TOTAL SHEETS
GA.	CSNHS-0008-00(415)	306	472

RELEASED FOR CONSTRUCTION
11-04-2009

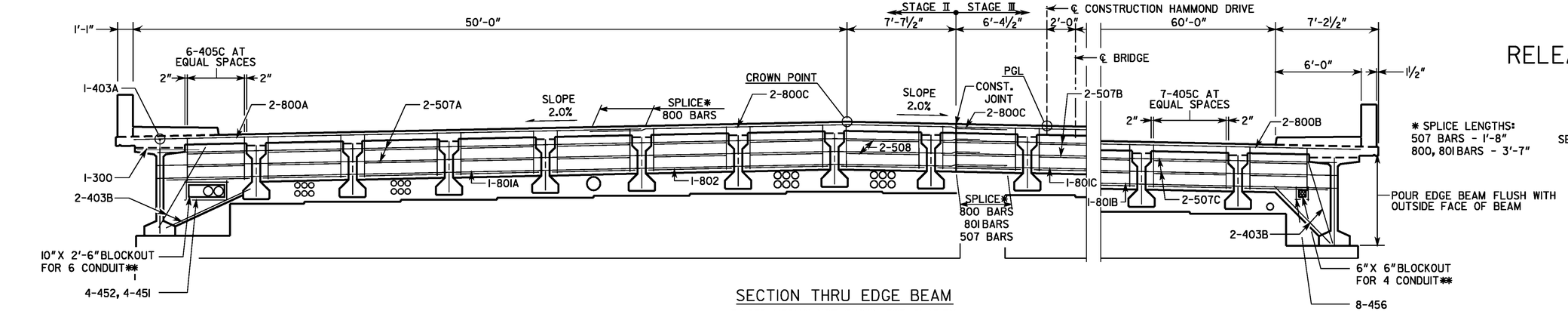

SECTION THRU EDGE BEAM

RAISED MEDIAN NOT SHOWN FOR CLARITY

* SPLICE LENGTHS:
507 BARS - 1'-8"
800, 801 BARS - 3'-7"

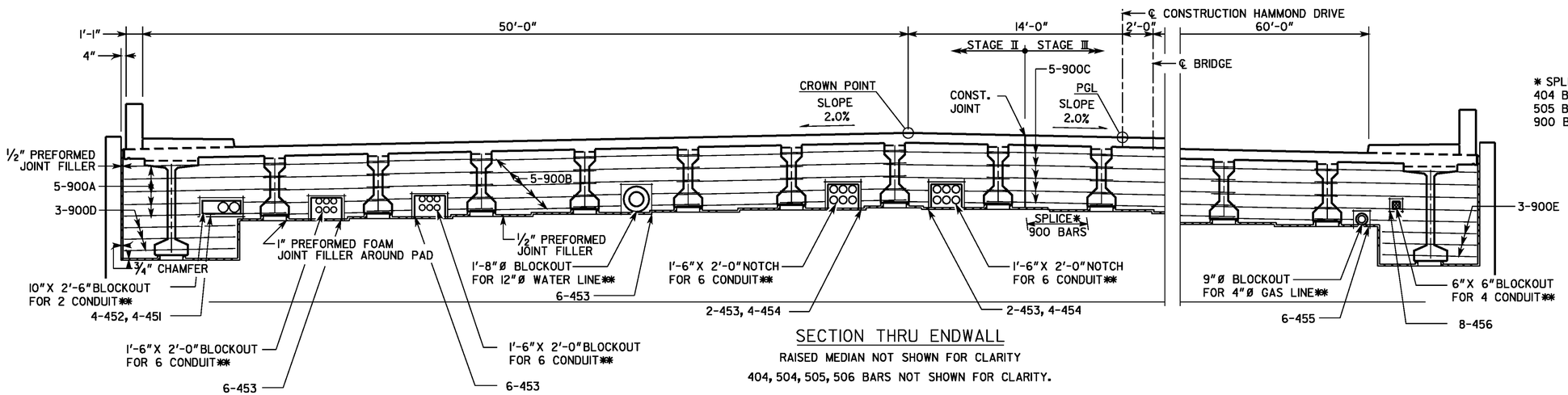

SECTION THRU ENDWALL

RAISED MEDIAN NOT SHOWN FOR CLARITY

404, 504, 505, 506 BARS NOT SHOWN FOR CLARITY.

* SPLICE LENGTHS:
404 BARS - 1'-4"
505 BARS - 1'-8"
900 BARS - 4'-6"

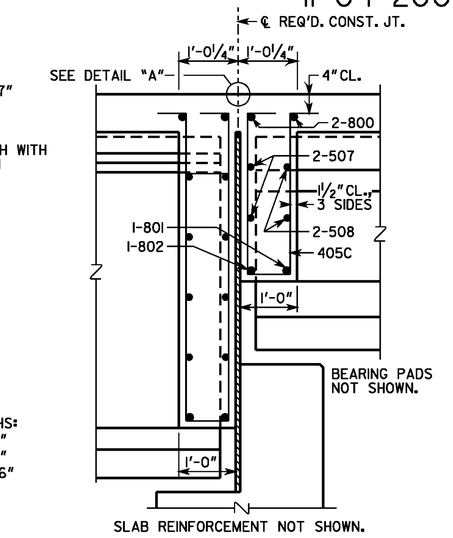

SECTION THRU EDGE BEAM AT BENT 3

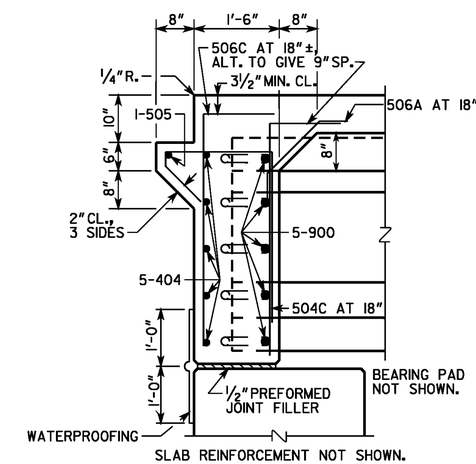

SECTION AT ENDWALL

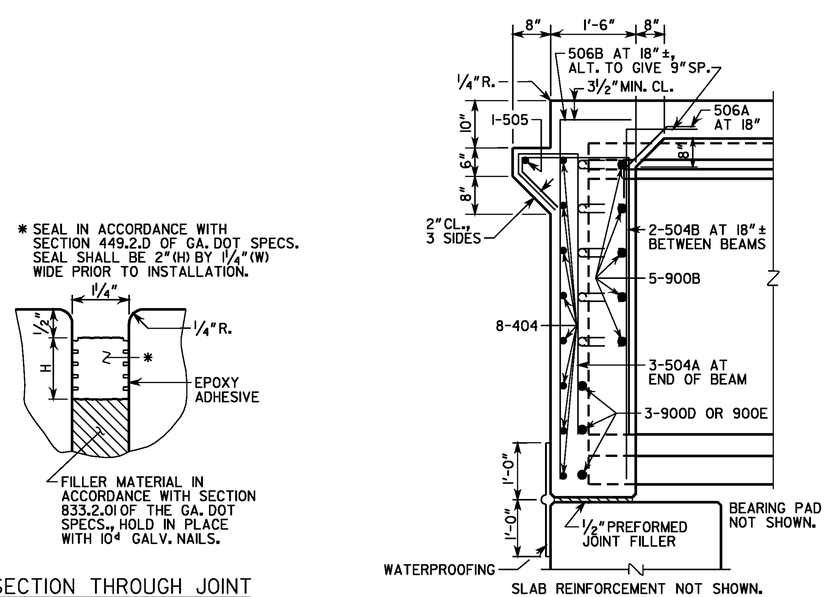

SECTION AT ENDWALL, BEAMS 1 AND 20

* SEAL IN ACCORDANCE WITH SECTION 449.2.D OF GA. DOT SPECS. SEAL SHALL BE 2"(H) BY 1¼"(W) WIDE PRIOR TO INSTALLATION.

SECTION THROUGH JOINT AT END BENT 4

** CLIP OR SHIFT ALL REINFORCEMENT TO CLEAR BLOCKOUTS. SEE SHEET 15, MISCELLANEOUS DETAILS, FOR UTILITY ATTACHMENT DETAILS.

BRIDGE NO. 1

DRAWING NO. 35-08

THE LPA GROUP

THE LPA GROUP INCORPORATED
TRANSPORTATION CONSULTANTS
3595 ENGINEERING DRIVE
NORCROSS, GEORGIA 30092
(770) 263-8118

GEORGIA
DEPARTMENT OF TRANSPORTATION
PRECONSTRUCTION DIVISION-OFFICE OF BRIDGE DESIGN

DATE | REVISIONS | BY

DECK SECTIONS - SPAN 3
HAMMOND DRIVE OVER SR 400
FULTON COUNTY CSNHS-0008-00(415)

NO SCALE NOVEMBER 2009

BRIDGE SHEET 8 OF 25

DESIGNED ANZ | CHECKED AWB | REVIEWED WEI/WMD
DRAWN BSB | DESIGN GROUP ACB | APPROVED PVL

11/6/2009 8:39:59 AM R:\AT740002\Bridge\Final\08-ds.dgn