STATE	PROJECT NUMBER	SHEET NO.	TOTAL SHEETS
GA.	CSNHS-0008-00(415)	304	472

RELEASED FOR CONSTRUCTION
11-04-2009

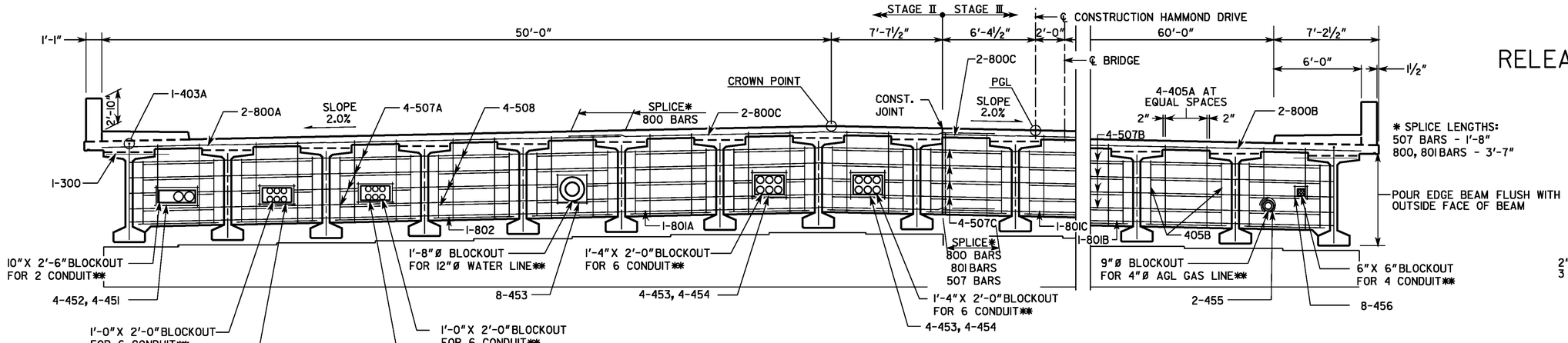

SECTION THRU EDGE BEAM

RAISED MEDIAN NOT SHOWN FOR CLARITY

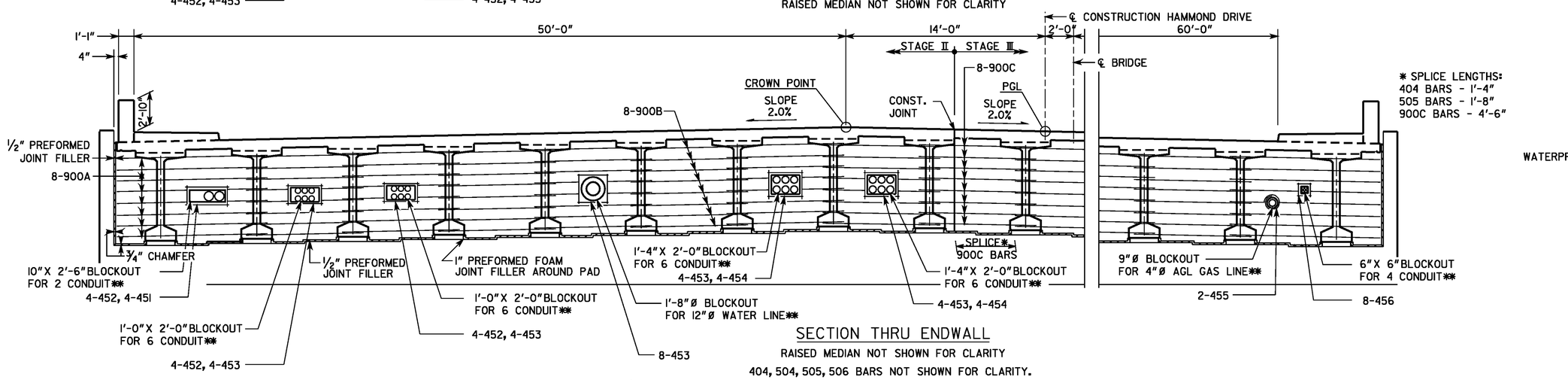

SECTION THRU ENDWALL

RAISED MEDIAN NOT SHOWN FOR CLARITY

404, 504, 505, 506 BARS NOT SHOWN FOR CLARITY.

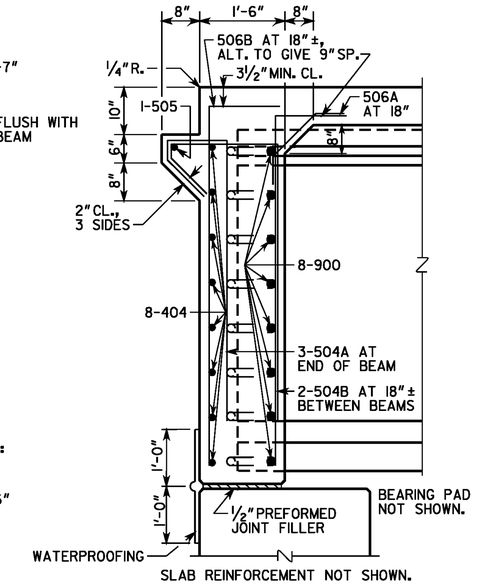

SECTION AT ENDWALL

* SEAL IN ACCORDANCE WITH SECTION 449.2.D OF GA. DOT SPECS. SEAL SHALL BE 2"(H) BY 1¼"(W) WIDE PRIOR TO INSTALLATION.

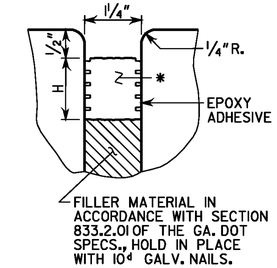

SECTION THROUGH JOINT AT END BENT 1

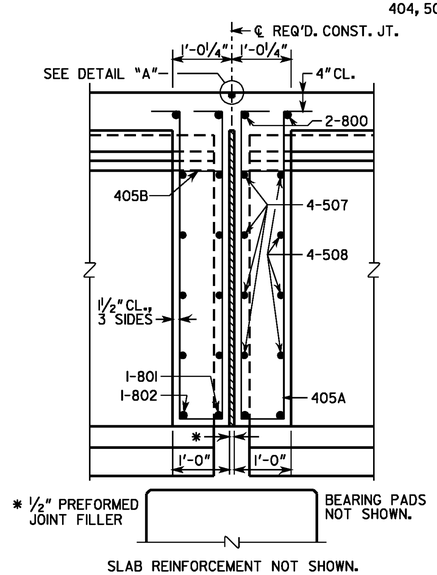

SECTION THRU EDGE BEAM AT BENT 2

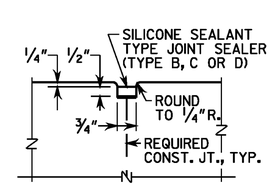

DETAIL "A"

** CLIP OR SHIFT ALL REINFORCEMENT TO CLEAR BLOCKOUTS. SEE SHEET 15, MISCELLANEOUS DETAILS, FOR UTILITY ATTACHMENT DETAILS.

BRIDGE NO. 1

DRAWING NO. 35-06

THE LPA GROUP

THE LPA GROUP INCORPORATED
TRANSPORTATION CONSULTANTS
3595 ENGINEERING DRIVE
NORCROSS, GEORGIA 30092
(770) 263-9118

GEORGIA
DEPARTMENT OF TRANSPORTATION
PRECONSTRUCTION DIVISION-OFFICE OF BRIDGE DESIGN

DATE | REVISIONS | BY

DECK SECTIONS - SPAN 1&2
HAMMOND DRIVE OVER SR 400
FULTON COUNTY CSNHS-0008-00(415)

NO SCALE NOVEMBER 2009

BRIDGE SHEET 6 OF 25

DESIGNED ANZ | CHECKED AWB | REVIEWED WEI/WMD
DRAWN BSB | DESIGN GROUP ACB | APPROVED PVL

11/6/2009 8:39:52 AM R:\AT740002\Bridge\Final\06-ds.dgn