STATE	PROJECT NUMBER	SHEET NO.	TOTAL SHEETS
GA.	CSNHS-0008-00(415)	303	472

RELEASED FOR CONSTRUCTION
11-04-2009

DIMENSION "D" IS MEASURED FROM TOP OF SLAB TO TOP OF BEAMS AT CENTERLINE BEARING. VARY "D" BETWEEN BEARINGS TO COMPENSATE FOR DEAD LOAD DEFLECTION AND VERTICAL CURVE. MAINTAIN A CONSTANT SLAB THICKNESS OF 7⅜". "D"= 9⅜" FOR SPAN 1 & 2

** CLIP OR SHIFT ALL REINFORCEMENT TO CLEAR BLOCKOUTS. SEE SHEET 15, MISCELLANEOUS DETAILS, FOR UTILITY ATTACHMENT DETAILS.

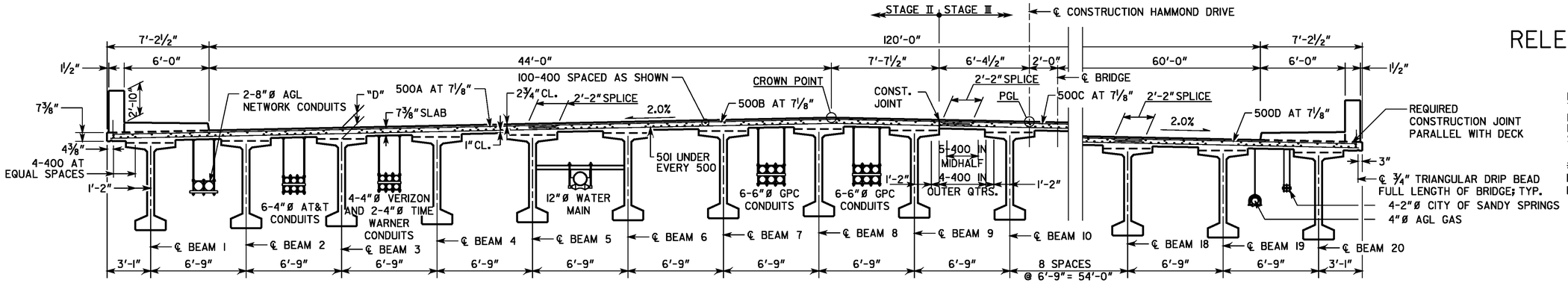

SECTION THRU SLAB

RAISED MEDIAN NOT SHOWN FOR CLARITY

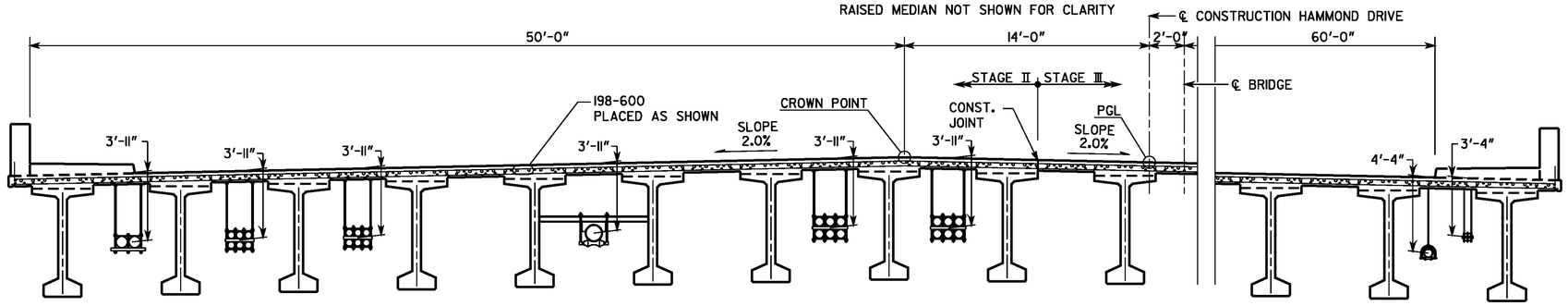

SECTION THRU SLAB AT INTERMEDIATE BENT

RAISED MEDIAN NOT SHOWN FOR CLARITY

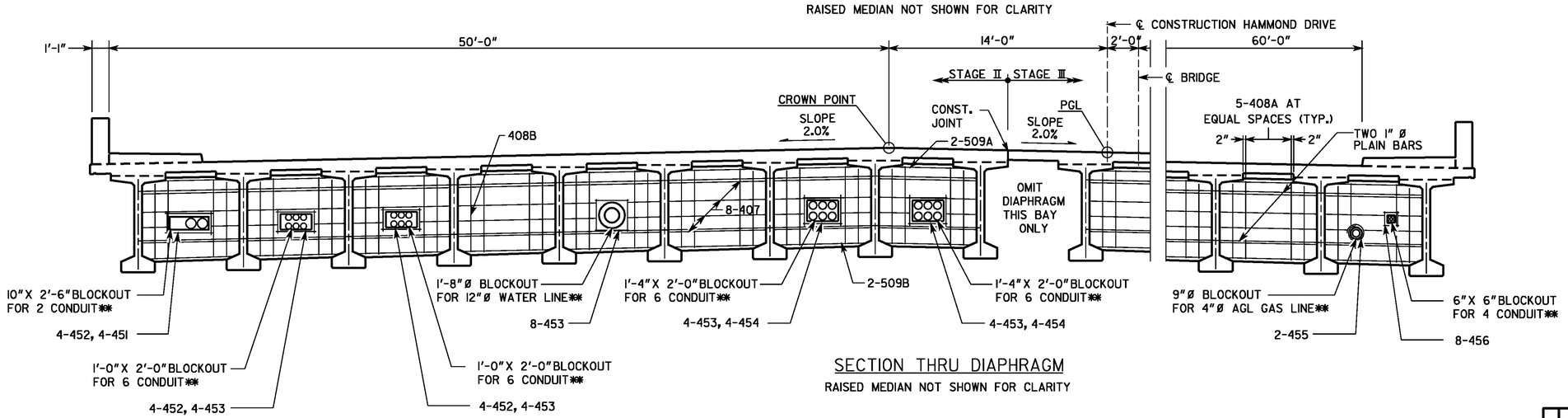

SECTION THRU DIAPHRAGM

RAISED MEDIAN NOT SHOWN FOR CLARITY

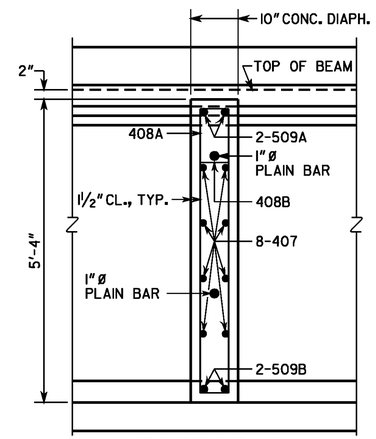

SLAB REINFORCEMENT NOT SHOWN.

SECTION THRU DIAPHRAGM

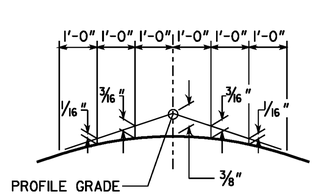

CROWN DETAIL

2.0% CROSS SLOPE

BRIDGE NO. 1

DRAWING NO. 35-05

THE LPA GROUP

THE LPA GROUP INCORPORATED
TRANSPORTATION CONSULTANTS
3595 ENGINEERING DRIVE
NORCROSS, GEORGIA 30092
(770) 263-8118

GEORGIA
DEPARTMENT OF TRANSPORTATION
PRECONSTRUCTION DIVISION-OFFICE OF BRIDGE DESIGN

DATE | REVISIONS | BY

DECK SECTIONS - SPAN 1&2
HAMMOND DRIVE OVER SR 400
FULTON COUNTY CSNHS-0008-00(415)

NO SCALE NOVEMBER 2009

BRIDGE SHEET 5 OF 25

DESIGNED ANZ | CHECKED AWB | REVIEWED WEI/WMD
DRAWN BSB | DESIGN GROUP ACB | APPROVED PVL

11/6/2009 8:39:47 AM R:\AT740002\Bridge\Final\05-ds.dgn