STATE	PROJECT NUMBER	SHEET NO.	TOTAL SHEETS
GA.	CSNHS-0008-00(415)	302	472

RELEASED FOR CONSTRUCTION
11-04-2009
REVISED 08-27-2010

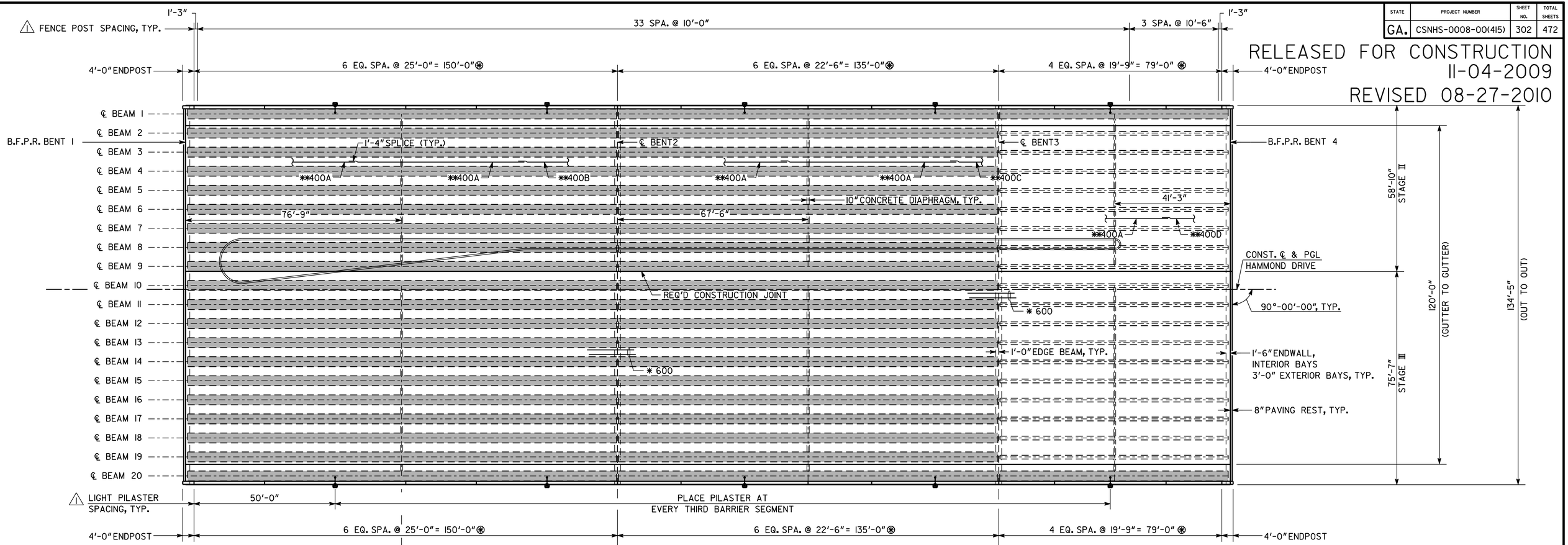

PLAN

℄ 1" EXP. JOINT IN PARAPET (TYP.)

℄ 1" EXP. JT. IN PARAPET AND REQUIRED CONST. JT. IN SLAB

℄ 1" EXP. JT. IN PARAPET AND REQUIRED CONST. JT. IN SLAB

* PLACE 2 600 BARS BETWEEN EACH PAIR OF 400 BARS IN TOP OF SLAB OVER INTERMEDIATE BENTS.

** ALTERNATE 400A AND 400B, 400A AND 400C OR 400A AND 400D BARS ACROSS DECK TO STAGGER LAP LOCATION

⊛ PARAPET JOINT SPACING MEASURED ALONG INSIDE FACE OF PARAPET.

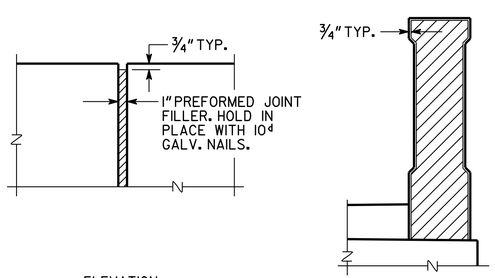

DETAIL OF 1" EXPANSION JOINT IN PARAPET

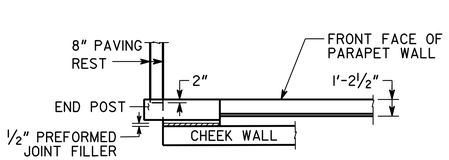

PAVING REST DETAIL

PLACE TRANSVERSE SIDEWALK MARKINGS ON SIDEWALK SPACED AT 5'-0"±.

COST OF BOND BREAKER AND EPOXY ADHESIVE TO BE INCLUDED IN PRICE BID FOR SUPERSTRUCTURE ITEMS.

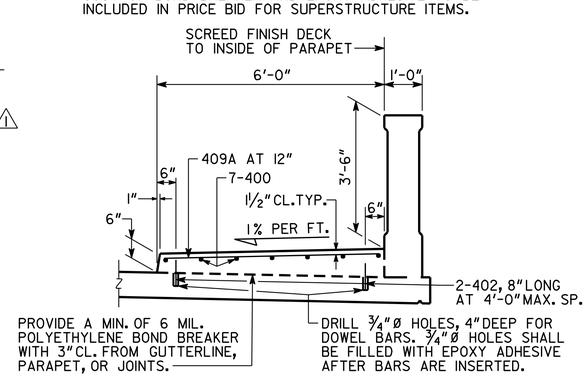

SIDEWALK AND PARAPET DETAILS FOR FENCE ATTACHMENT

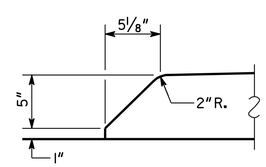

MEDIAN CURB FACE DETAIL

NO SCALE

PLACE TRANSVERSE MARKINGS ON MEDIAN SPACED AT 5'-0"±.

COST OF BOND BREAKER AND EPOXY ADHESIVE TO BE INCLUDED IN PRICE BID FOR SUPERSTRUCTURE ITEMS.

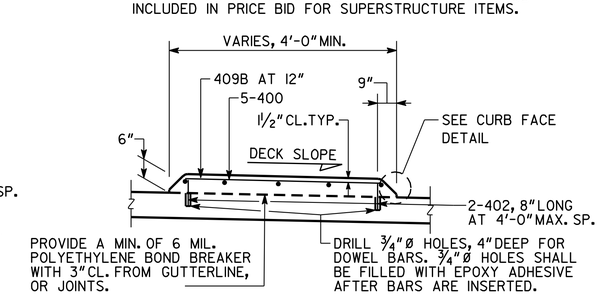

RAISED MEDIAN DETAILS

SUPERSTRUCTURE QUANTITIES

ITEM	SPAN 1	SPAN 2	SPAN 3	TOTAL
SUPERSTR CONCRETE, CLASS AA (CY)	681.7	585	346.7	1,613.4
SUPERSTR REINFORCING STEEL (LB)	122,258	110,068	68,307	300,633

NOTE: END POST REINFORCING STEEL AND CONCRETE QUANTITIES INCLUDED IN SPAN 1 AND 3.
600 BAR QUANTITY INCLUDED IN SPAN 2

BRIDGE NO. 1

DRAWING NO. 35-04

THE LPA GROUP

THE LPA GROUP INCORPORATED
TRANSPORTATION CONSULTANTS
3595 ENGINEERING DRIVE
NORCROSS, GEORGIA 30092
(770) 263-9118

GEORGIA
DEPARTMENT OF TRANSPORTATION
PRECONSTRUCTION DIVISION-OFFICE OF BRIDGE DESIGN

DECK PLAN
HAMMOND DRIVE OVER SR 400
FULTON COUNTY CSNHS-0008-00(415)

NO SCALE NOVEMBER 2009

REVISIONS	BY	DATE
REVISED PARAPET SECTION △1	BSB	08/27/2010

BRIDGE SHEET 4 OF 22

DESIGNED ANZ | CHECKED AWB | REVIEWED WEI/WMD
DRAWN BSB | DESIGN GROUP ACB | APPROVED PVL

11/2/2011 9:47:59 AM R:\AT740002\Bridge\Final\04-dp.dgn