COUNTY	PROJECT NUMBER	SHEET NO.	TOTAL SHEETS
	CSNHS-0008-00(415)	278	472

RELEASED FOR CONSTRUCTION 11/04/09

FILL SECTION

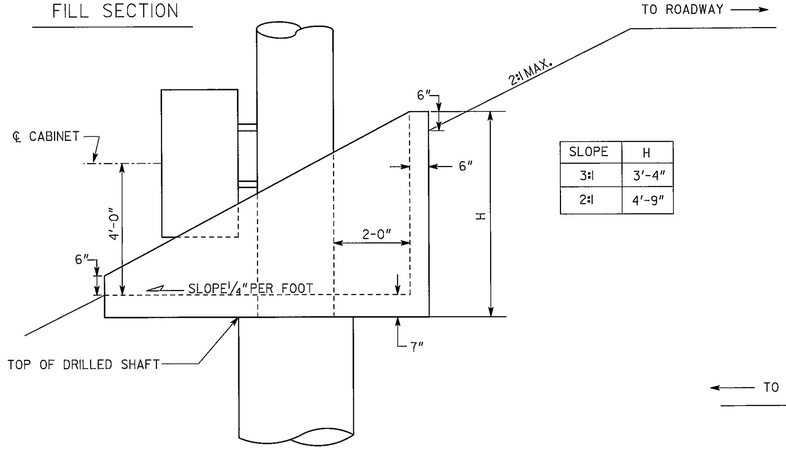

SLOPE	H
3:1	3'-4"
2:1	4'-9"

CUT SECTION

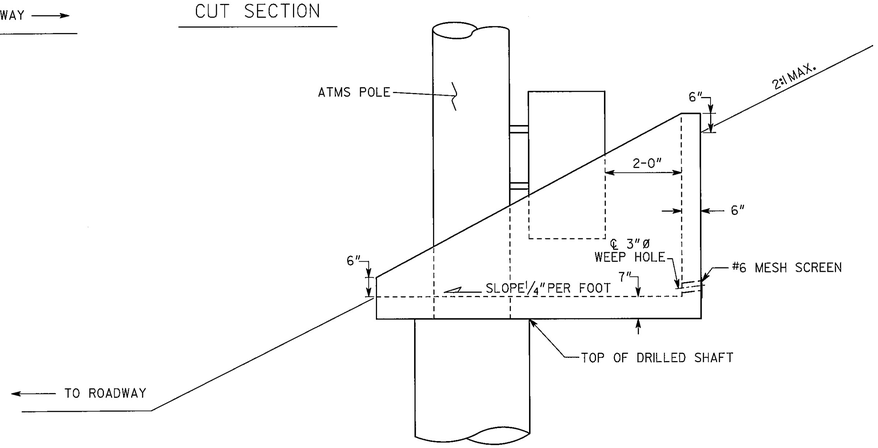

DESIGN DATA

SPECIFICATIONS ---------- AASHTO 2002

CONCRETE ---------- CLASS A, f'_c = 3,000 PSI

REINFORCEMENT STEEL ---------- GRADE 60, f_y = 60,000 PSI

DESIGN SOIL PRESSURE ---------- 3 KSF

COHESION ---------- 0

ANGLE OF INTERNAL FRICTION ---------- 28°

UNIT WEIGHT ---------- 110 PCF

COEFFICIENT OF SLIDING FRICTION ---------- 0.45

GENERAL NOTES

SPECIFICATIONS - GEORGIA STANDARD SPECIFICATIONS, 2001 EDITION, AS MODIFIED BY CONTRACT DOCUMENTS.

REINFORCING STEEL - ALL REINFORCING STEEL SHALL BE PLACED AND TIED IN ACCORDANCE WITH THE GEORGIA DOT SPECIFICATIONS. WELDING OF REINFORCING STEEL WILL NOT BE PERMITTED.

FINISH - EXPOSED SURFACES OF THE WALL SHALL RECEIVE A TYPE III FINISH.

CONCRETE COVER - MAINTAIN 3" COVER ON ALL FOOTING REINFORCING AND 2" COVER ON ALL STEM REINFORCING.

INCIDENTAL ITEMS - COST INCIDENTAL TO THE WORK THAT IS NOT SPECIFICALLY COVERED BY THE GEORGIA STANDARD SPECIFICATIONS, SUPPLEMENTAL SPECIFICATIONS AND/OR SPECIAL PROVISIONS SHALL BE INCLUDED IN THE OVERALL BID SUBMITTED. THIS INCLUDES THE COST OF JOINT FILLERS, AND OTHER INCIDENTAL ITEMS NECESSARY TO COMPLETE THE WORK.

SUMMARY OF QUANTITIES

PAY ITEM NUMBER	QUANTITY	UNIT	PAY ITEM
500-3701	3	CY	CLASS A CONCRETE, RETAINING WALL
511-1000	320	LB	BAR REINFORCING STEEL

NOTE: QUANTITIES SHOWN ASSUME A 2:1 SLOPE

* -FIELD CUT TO CLEAR ATMS POLE

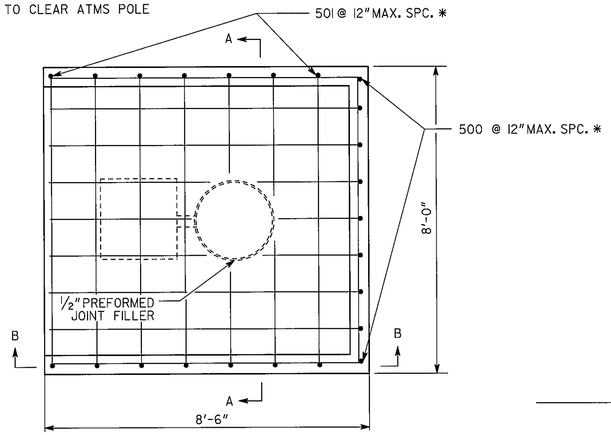

PLAN

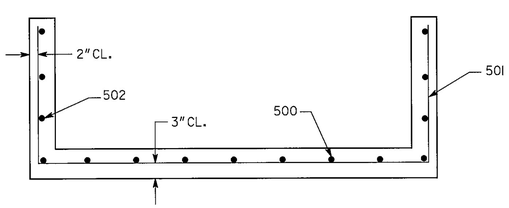

SECTION A-A

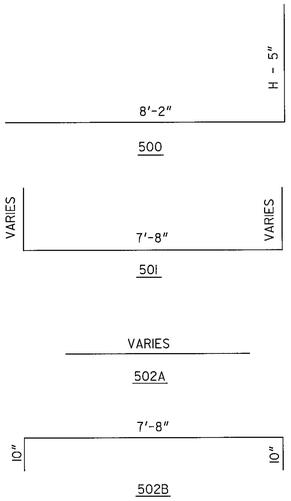

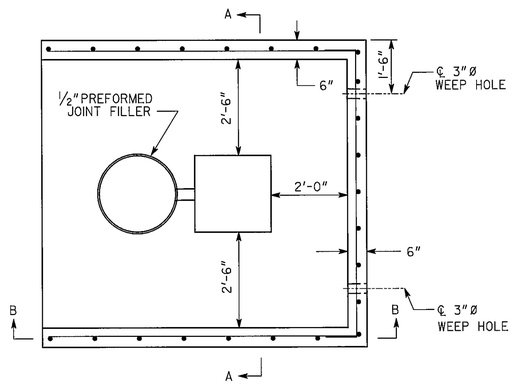

PLAN

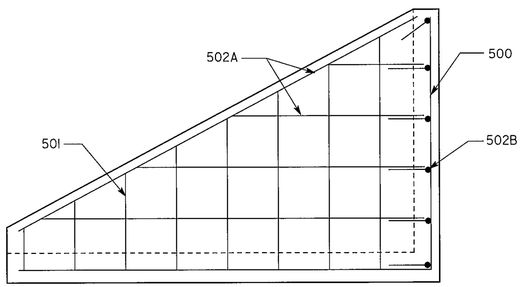

SECTION B-B

GEORGIA
DEPARTMENT OF TRANSPORTATION

- NO SCALE -

REVISION DATES
06/01/2005

STATE OF GEORGIA
DEPARTMENT OF TRANSPORTATION
OFFICE: INNOVATIVE PROGRAM DELIVERY
ATMS PLANS
PLATFORM DETAILS

ITS-05

DESIGNED DDF	CHECKED SWW	REVIEWED HSL	DRAWING No.
DRAWN DDF	DESIGN GROUP SWW	APPROVED PLV	28-09