RELEASED FOR CONSTRUCTION 11/04/09

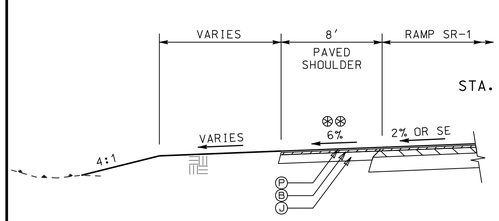

TS-15A
STA 204+50.00 TO 205+89.00

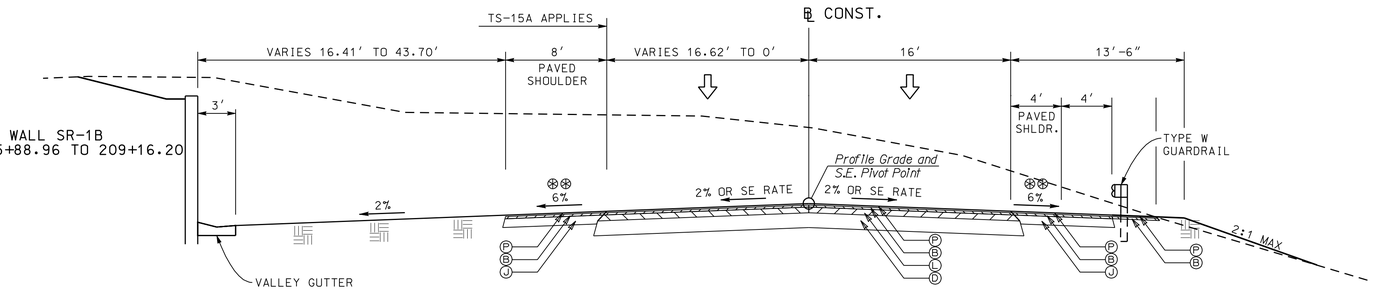

TS-15
TANGENT OR SUPERELEVATED SECTION
APPLIES: STA 204+50.00 TO 209+16.20
RAMP SR-1

VARIABLE SLOPE CONTROLS		
SLOPE	FILL	CUT
4:1	0-6.0'	0-6.0'
2:1	6.0'+ *	6.0'+

* REQ'D GUARDRAIL

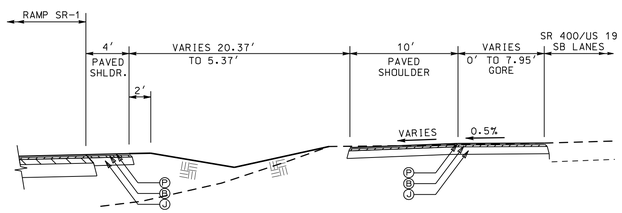

TS-16A
STA 211+01.67 TO 212+53.51

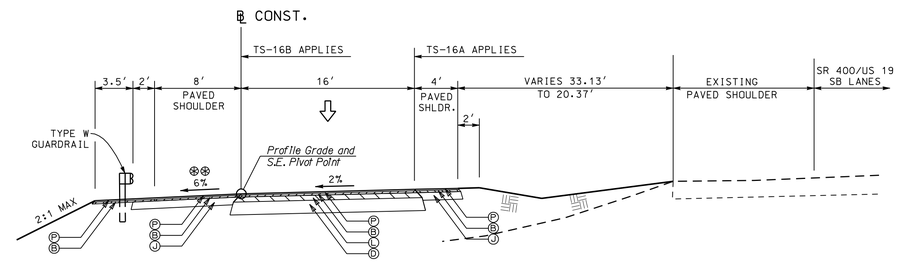

TS-16
TANGENT OR SUPERELEVATED SECTION
APPLIES: STA 209+16.20 TO 212+53.51
RAMP SR-1

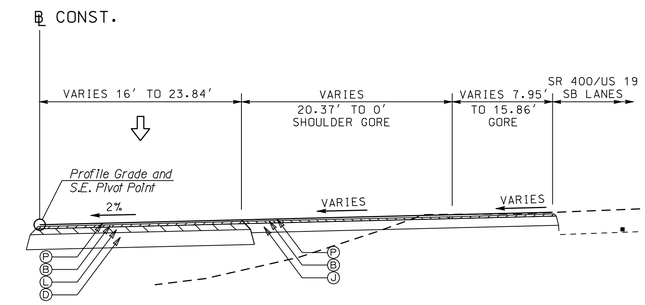

TS-16B
STA 212+00.00 TO 212+53.51

REQUIRED PAVEMENT

- (A) ASPHALTIC CONC. 12.5 mm, GROUP 2, WITH POLYMERS, 165*/SY
- (B) ASPHALTIC CONCRETE 19 mm SUPERPAVE, 220*/SY
- (C) ASPHALTIC CONCRETE 25 mm SUPERPAVE, 880*/SY
- (D) GRADED AGGREGATE BASE, 12"
- (E) ASPHALTIC CONCRETE MILLING OR LEVELING AS REQD
- (F) CONCRETE CURB & GUTTER 8"x 30" GA STD. 9032 B.TYPE 2
- (G) CONCRETE CURB & GUTTER 8"x 30" GA STD. 9032 B.TYPE 7
- (H) CONC SIDEWALK, 4 IN
- (I) CONC MEDIAN PAVING, 4 IN
- (J) GRADED AGGREGATE BASE, 6"
- (K) 9" PLAIN PC CONC PAVEMENT CL 3
- (L) ASPHALTIC CONCRETE 25 mm SUPERPAVE, 330*/SY
- (M) ASPHALTIC CONCRETE 12.5 mm SMA (165 LB/SY)
- (N) ASPHALTIC CONCRETE 25 mm SUPERPAVE 660 LB/SY
- (O) GRADED AGGREGATE BASE, 10"
- (P) ASPHALTIC CONCRETE 12.5 mm SUPERPAVE (165 LB/SY)

ALL SLOPES 2:1 OR GREATER REQUIRE GUARDRAIL.

⊛ ALGEBRAIC DIFFERENCE IN PAVING AND SHOULDER SLOPES NOT TO EXCEED 8%.

⊛⊛ SHOULDER TO SLOPE AT NORMAL RATE OR SUPERELEVATION RATE, WHICHEVER IS GREATER.

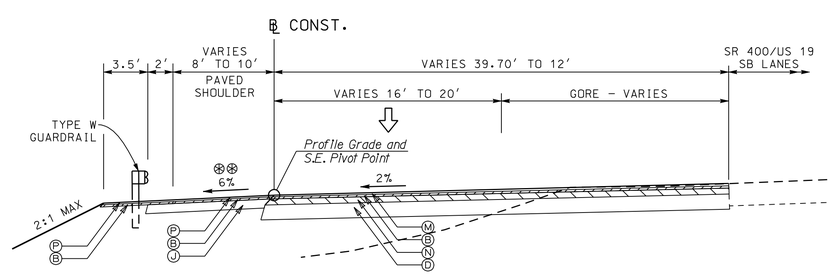

TS-17
TANGENT OR SUPERELEVATED SECTION
APPLIES: STA 212+53.51 TO 216+49.21 (1219+11.94)
RAMP SR-1

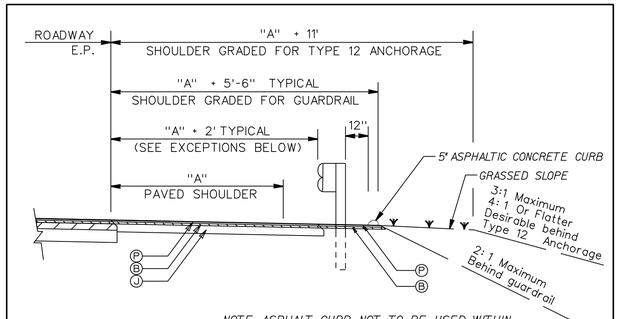

NOTE: ASPHALT CURB NOT TO BE USED WITHIN THE LIMITS OF THE TYPE 12 ANCHOR

GUARDRAIL OFFSET EXCEPTIONS:
"A" + 4' - STA 301+56 LT TO STA 302+60 LT, RAMP NR-2
"A" + 6' - STA 306+94 RT TO STA 311+61 RT, RAMP NR-2
"A" + 4' - STA 201+00 RT TO STA 209+05 RT, RAMP SR-1

TYPICAL ASPHALT SHOULDER
DETAIL FOR SINGLE FACE GUARDRAIL
SEE PLAN VIEW FOR LOCATION.

THE LPA GROUP
TRANSPORTATION CONSULTANTS
3595 ENGINEERING DRIVE
NORCROSS, GEORGIA 30092
(770) 263-9118

REVISION DATES

STATE OF GEORGIA
DEPARTMENT OF TRANSPORTATION
OFFICE: INNOVATIVE PROGRAM DELIVERY

TYPICAL SECTIONS

RAMP SR-1

DRAWING No. 5-06