STATE	PROJECT NUMBER	SHEET NO.	TOTAL SHEETS
GA	CSNHS-0008-00(415)	10	472

RELEASED FOR CONSTRUCTION 11/04/09

VARIABLE SLOPE CONTROLS		
SLOPE	FILL	CUT
4:1	0-6.0'	0-6.0'
2:1	6.0'+ *	6.0'+

* REQ'D GUARDRAIL

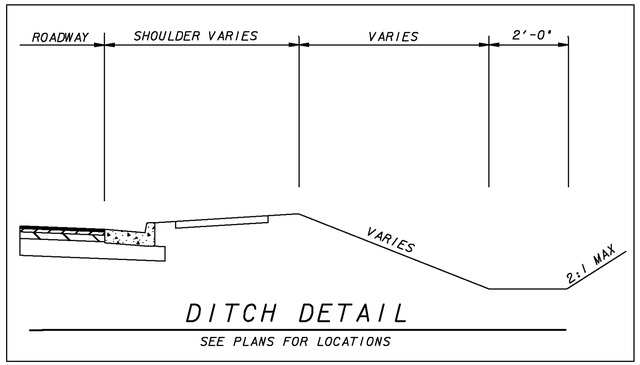

DITCH DETAIL

SEE PLANS FOR LOCATIONS

PAVEMENT REINFORCING FABRIC DETAIL

TYPICAL SECTION DETAIL TO BE USED WHEN EXISTING PAVEMENT IS TO BE RESURFACED WITH TWO INCHES OR MORE OF ASPHALTIC CONCRETE

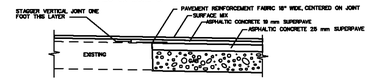

TYPICAL SECTION DETAIL TO BE USED WHEN EXISTING PAVEMENT IS TO BE RESURFACED WITH LESS THAN TWO INCHES OF ASPHALTIC CONCRETE

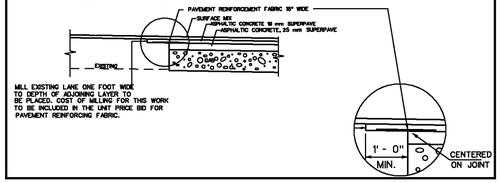

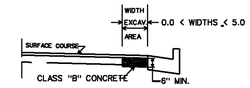

NO SCALE
CLASS "B" CONCRETE BASE OR PAVEMENT WIDENING
Item Code 500-9999 - Cu. Yds.

In excavated areas between the existing paving and new curb and gutter that are 5'-0" or less in width, Class "B" concrete shall be placed in lieu of the base and paving specified by the typical section. Payment will be made under "Class B Concrete Base and Pavement Widening".

In excavated areas greater than 5'-0" in width, the Contractor shall place base and paving as specified on the typical section.

See plans for details of curb and gutter construction.

CLASS "B" CONCRETE BASE OR WIDENING DETAIL

REQUIRED PAVEMENT

- (A) ASPHALTIC CONC. 12.5 mm, GROUP 2, WITH POLYMERS, 165*/SY
- (B) ASPHALTIC CONCRETE 19 mm SUPERPAVE, 220*/SY
- (C) ASPHALTIC CONCRETE 25 mm SUPERPAVE, 880*/SY
- (D) GRADED AGGREGATE BASE, 12"
- (E) ASPHALTIC CONCRETE MILLING OR LEVELING AS REQD
- (F) CONCRETE CURB & GUTTER 8"x 30" GA STD. 9032 B.TYPE 2
- (G) CONCRETE CURB & GUTTER 8"x 30" GA STD. 9032 B.TYPE 7
- (H) CONC SIDEWALK, 4 IN
- (I) CONC MEDIAN PAVING, TYPE 7 CURB FACE, 6 IN

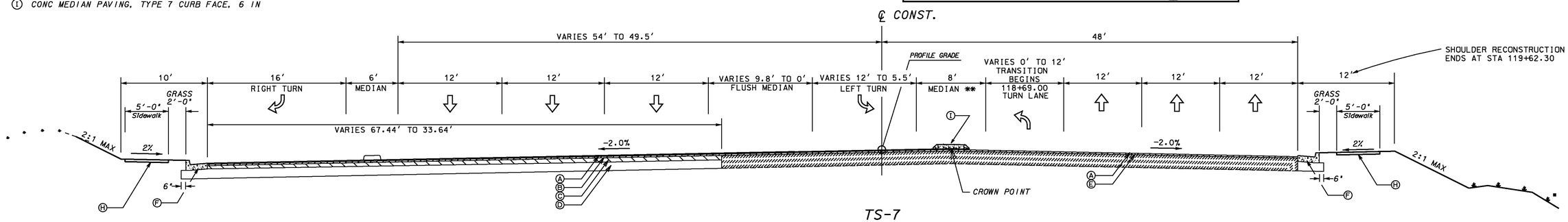

TS-7

TANGENT MAINLINE SECTION
OVERLAY/ FULL DEPTH WIDENING

APPLIES: STA 117+70.00 TO 119+86.30
HAMMOND DRIVE

** RAISED MEDIAN TRANSITIONS RIGHT TO LEFT
STA. 118+68.80 TO STA. 119+86.30

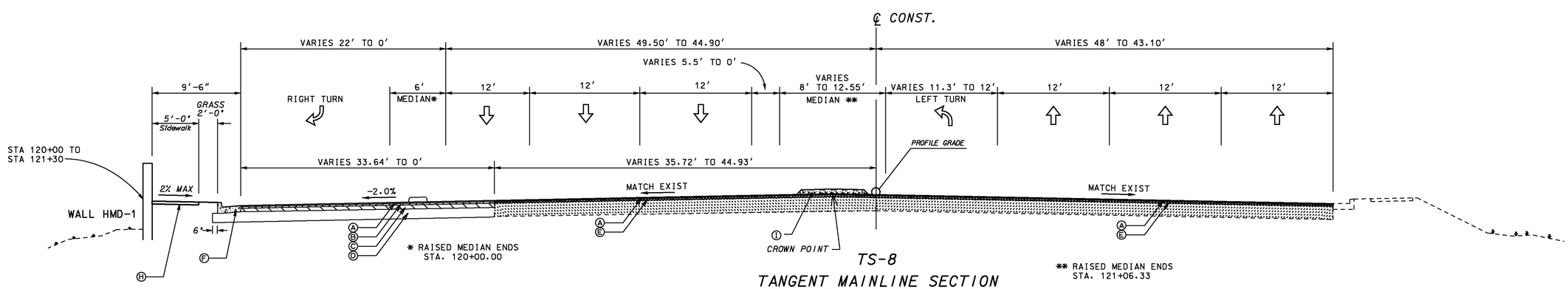

TS-8

TANGENT MAINLINE SECTION
OVERLAY/FULL DEPTH WIDENING

APPLIES: STA 120+00.00 TO 121+30.00
HAMMOND DRIVE

** RAISED MEDIAN ENDS
STA. 121+06.33

THE LPA GROUP
TRANSPORTATION CONSULTANTS
3595 ENGINEERING DRIVE
NORCROSS, GEORGIA 30092
(770) 263-9118

REVISION DATES		

STATE OF GEORGIA
DEPARTMENT OF TRANSPORTATION
OFFICE: INNOVATIVE PROGRAM DELIVERY

TYPICAL SECTIONS

HAMMOND DRIVE

DRAWING No. 5-03