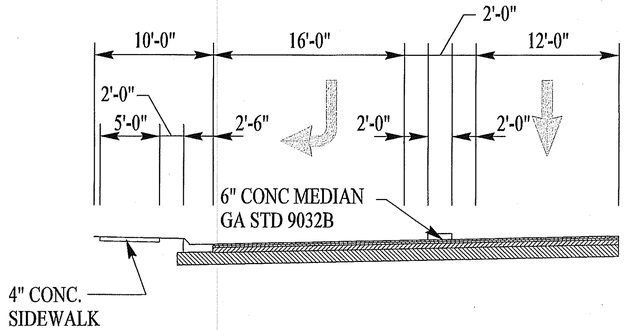

EXCEPTION #1

N.T.S.

STA. 116+92.82 TO STA. 120+75.52
(USE WITH TYPICAL SECTION #2)

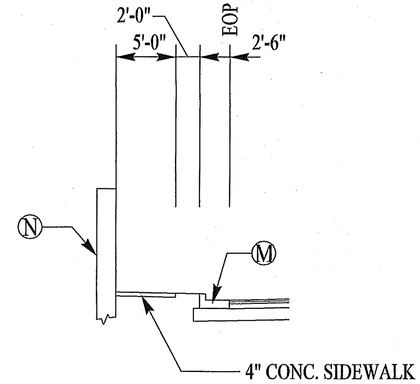

EXCEPTION #2

N.T.S.

STA. 119+75 TO STA. 121+31
(USE WITH TYPICAL SECTION #1 & 2)

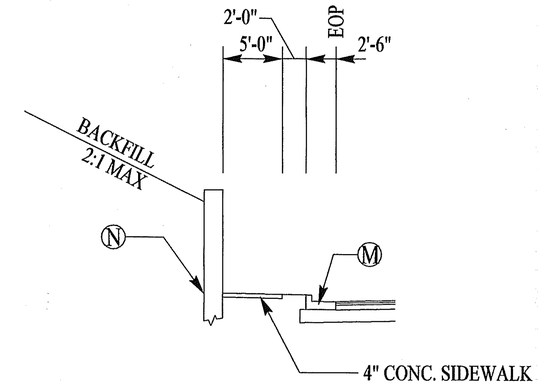

EXCEPTION #3

N.T.S.

STA. 107+85.65 TO STA. 111+75.57
(USE WITH TYPICAL SECTION #1 & 2)

Ⓜ 8"x30" CONC. CURB & GUTTER GA STD 9032B (TP 2)
Ⓝ RETAINING WALL (TYPE TO BE DETERMINED BY ENGINEER)

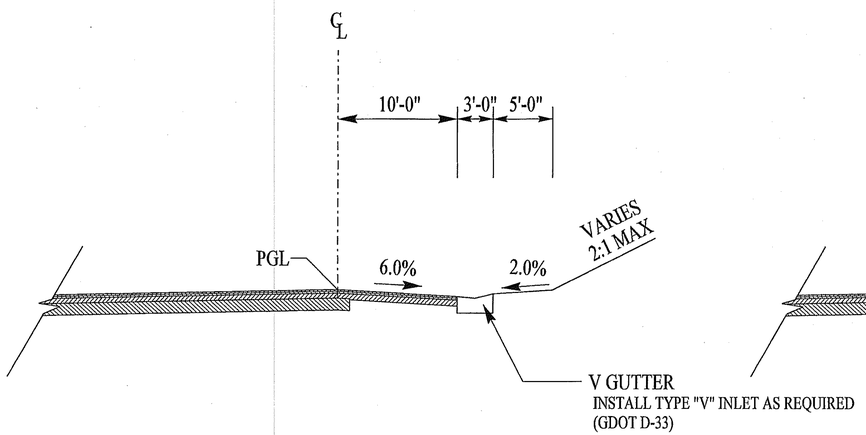

EXCEPTION # 4

N.T.S.

STA. 301+64.7 TO STA. 306+50.00
(USE WITH TYPICAL SECTION #4A, RAMP NR 2)

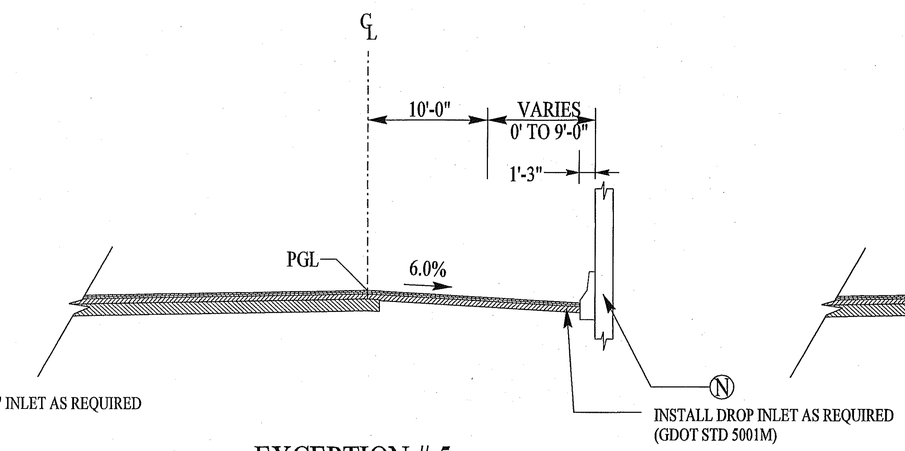

EXCEPTION # 5

N.T.S.

STA. STA. 211+43.20 TO STA 215+14.91
(USE WITH TYPICAL SECTION #4A & B, RAMP SR 1)

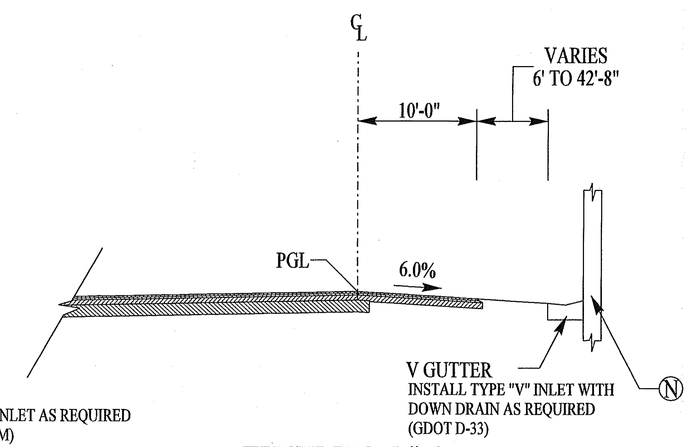

EXCEPTION # 6

N.T.S.

STA. 207+29.88 TO STA. 211+43.20
(USE WITH TYPICAL SECTION #4A, RAMP SR 1)

REVISION DATES		

STATE OF GEORGIA
DEPARTMENT OF TRANSPORTATION
OFFICE: URBAN DESIGN

TYPICAL SECTIONS

SR 400/HAMMOND DRIVE
INTERCHANGE

DRAWING NO. 5-04