REVISED 4-24-2008

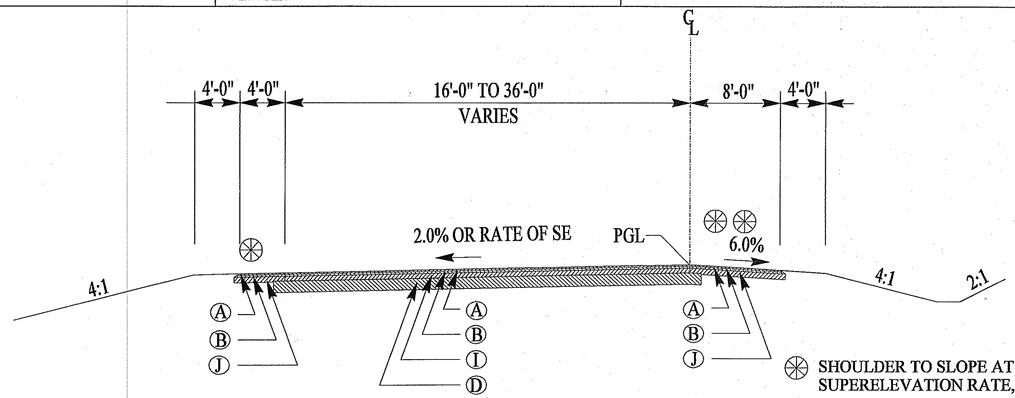

TYPICAL SECTION #4A

RAMP SR 1 STA 203+99.38 TO STA 214+90.19
RAMP NR2 STA 301+56.57 TO STA 311+53.75
(SEE DWG # 6 FOR EXCEPTIONS)
N.T.S.

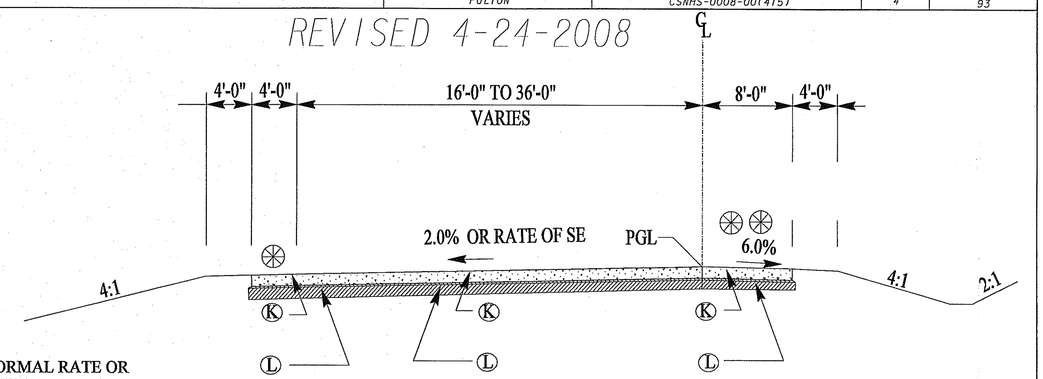

TYPICAL SECTION #4B

RAMP SR 1 STA 214+90.19 TO STA 215+94.04
RAMP NR2 STA 300+57.41 TO STA 301+56.57
(SEE DWG # 6 FOR EXCEPTIONS)
N.T.S.

⊛ SHOULDER TO SLOPE AT NORMAL RATE OR SUPERELEVATION RATE, WHICHEVER IS GREATER.

⊛⊛ SHOULDER TO SLOPE AT NORMAL RATE, HOWEVER, THE ALGEBRAIC DIFFERENCE IN PAVING SLOPE AND SHOULDER SLOPE SHALL NOT EXCEED 8%. MINIMUM SHOULDER SLOPE TO BE 2%.

- (A) ASPHALTIC CONCRETE 12.5 mm SUPERPAVE (165 LB/SY)
- (B) ASPHALTIC CONCRETE 19 mm SUPERPAVE (220 LB/SY)
- (I) ASPHALTIC CONCRETE 25 mm SUPERPAVE (330 LB/SY)
- (D) GRADED AGGREGATE BASE (12")
- (J) GRADED AGGREGATE BASE (6")
- (K) 9" PLAIN PC CONC PAVEMENT CL 3
- (L) GRADED AGGREGATE BASE (10")

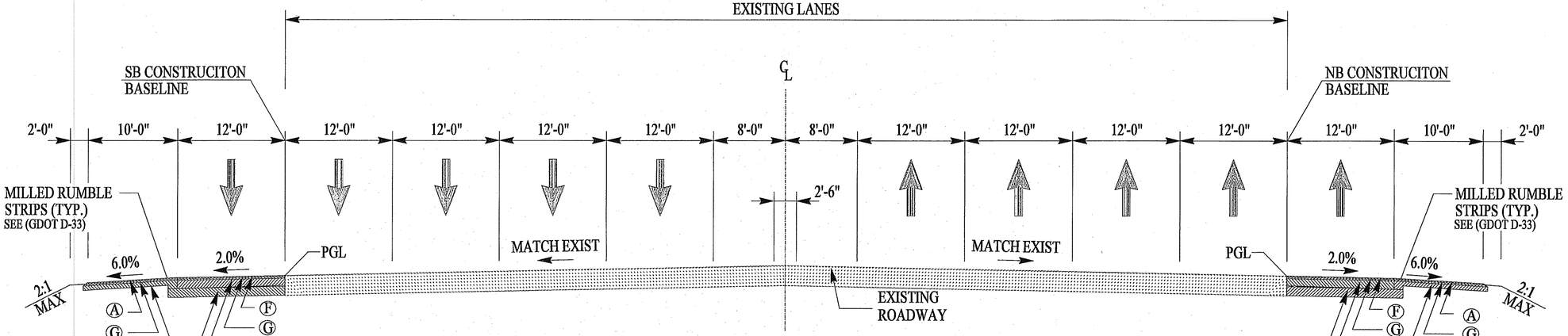

TYPICAL SECTION #3

SR 400
N.T.S.
STA. 1212+60.40 TO STA. 1241+45.52

- (F) ASPHALTIC CONCRETE 12.5 mm SMA (165 LB/SY)
- (G) ASPHALTIC CONCRETE 19 mm SUPERPAVE (220 LB/SY)
- (H) ASPHALTIC CONCRETE 25 mm SUPERPAVE (660 LB/SY)
- (D) GRADED AGGREGATE BASE (12")
- (J) GRADED AGGREGATE BASE (6")