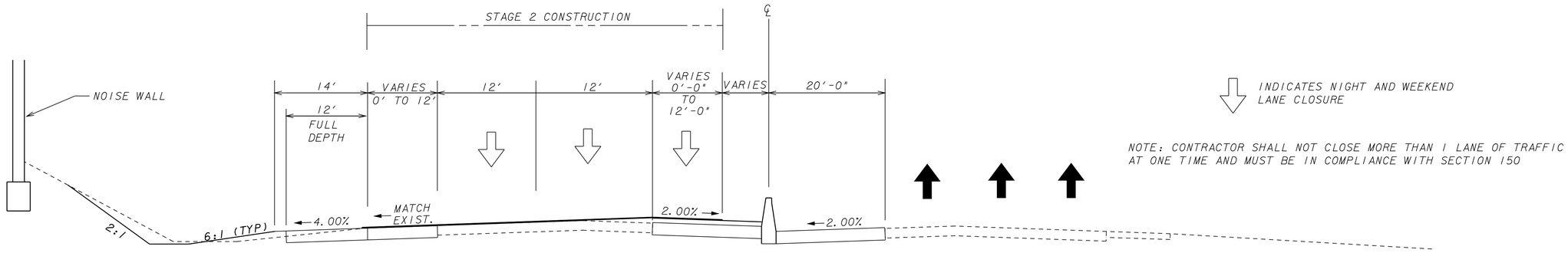

STAGE 2 CONSTRUCTION

STA. 972+00.00 TO 990+80.67

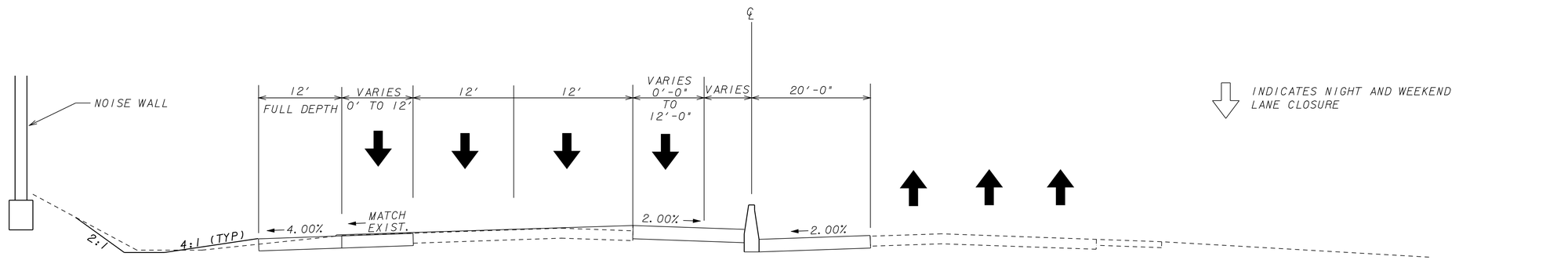

PROPOSED SECTION

STA. 972+00.00 TO 990+80.67

THE LPA GROUP
TRANSPORTATION CONSULTANTS
3595 ENGINEERING DRIVE
NORCROSS, GEORGIA 30092
(770) 263-9118

REVISION DATES		

STATE OF GEORGIA
DEPARTMENT OF TRANSPORTATION

OFFICE: URBAN DESIGN

STAGING DETAILS

APPLIES FROM
STA. 972+00.00 TO 990+80.67

DRAWING No. 20-03

3/1/2007 GPLN