STATE	PROJECT NUMBER	SHEET NO.	TOTAL SHEETS
GA.		764	839

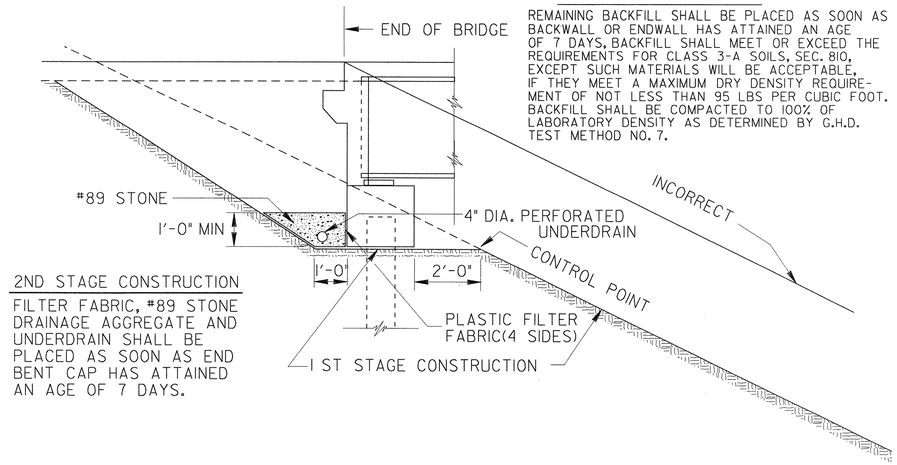

SKETCH SHOWING CONSTRUCTION OF FILLS AT ENDS OF BRIDGES

NO SCALE

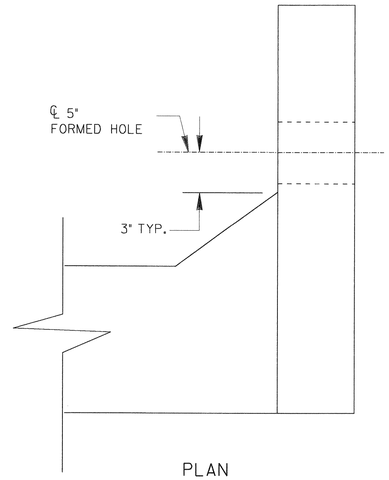

PLAN

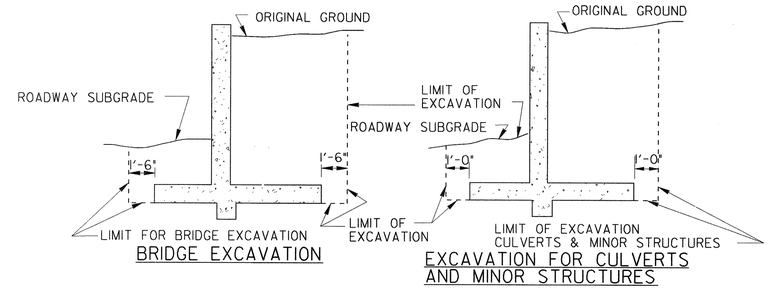

BRIDGE EXCAVATION

EXCAVATION FOR CULVERTS AND MINOR STRUCTURES

TYPICAL DETAILS OF EXCAVATION AT STRUCTURES

NOTE: WHERE FILL IS PLACED BEFORE CONSTRUCTION OF STRUCTURES THE COST OF EXCAVATION AND BACKFILL WILL BE INCLUDED IN THE COST OF OTHER ITEMS. THERE WILL BE NO PAYMENT FOR EXCAVATION UNDER THIS CONDITION.

AS-BUILT

NOTES:

1. PERFORATED UNDERDRAIN SHALL EXTEND TO THE INSIDE FACE OF WING AT THE HIGH END OF THE CAP.
2. AT THE LOW END OF THE CAP, CONNECT PERFORATED UNDERDRAIN TO A COMPATIBLE SOLID PIPE FROM THE INSIDE FACE OF WING UNTIL IT EXITS THE SLOPE. SOLID PIPE SHALL HAVE A MINIMUM SLOPE OF 2%.
3. SOLID PIPE MAY BE PLACED AT EITHER END OF CAPS WITH LEVEL BOTTOM.
4. PERFORATED UNDERDRAIN SHALL BE INSTALLED PARALLEL TO BOTTOM OF CAP. LOW POINTS OR SAGS THAT MAY TRAP WATER WILL NOT BE ALLOWED.
5. FILTER FABRIC SHALL NOT BE ATTACHED TO THE END BENT CAP.
6. COST FOR PROVIDING AND INSTALLING FILTER FABRIC, UNDERDRAIN, AND STONE SHALL BE INCLUDED IN THE PRICE BID FOR CONTRACT ITEMS.

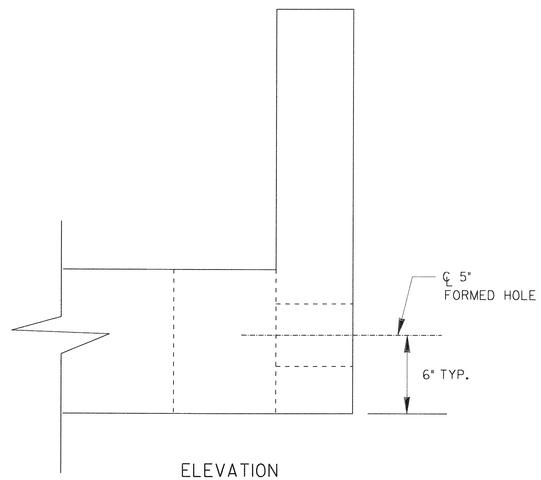

ELEVATION

WINGWALL DETAIL

SHADED AREA IS BRIDGE EXCAVATION.

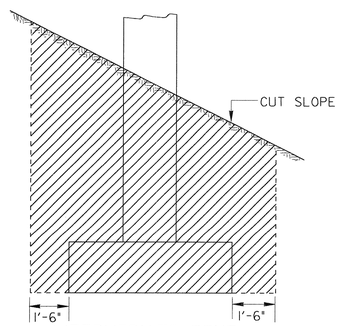

INTERMEDIATE BENT

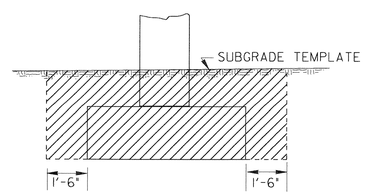

INTERMEDIATE BENT

TYPICAL EXCAVATION DETAILS AT BRIDGE BENTS IN CUT SECTIONS

NO SCALE

DATE	DEPARTMENT OF TRANSPORTATION STATE OF GEORGIA		
REVISION	STANDARD TYPICAL FILL DETAIL AT END OF BRIDGE		
	NO SCALE		REDRAWN SEPT., 1999
BY	DES. ____ DRW. ____ TRA. ____ CHK. ____	(SUBMITTED) STATE ROAD & AIRPORT DESIGN ENGR. (APPROVED) CHIEF ENGINEER	NUMBER 9037