STATE	PROJECT NUMBER	SHEET NO.	TOTAL SHEETS
GA.		706	839

OUTLET HEADWALL

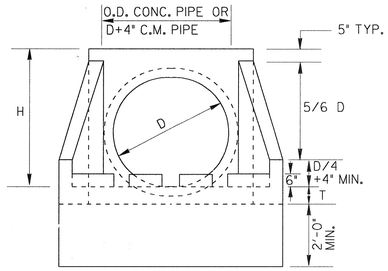

FRONT ELEVATION

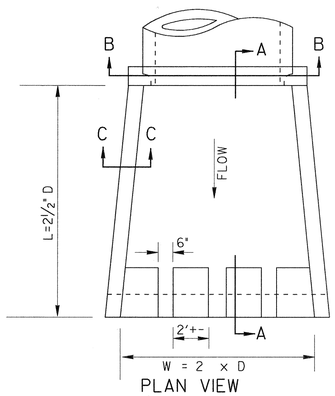

PLAN VIEW

INLET HEADWALL

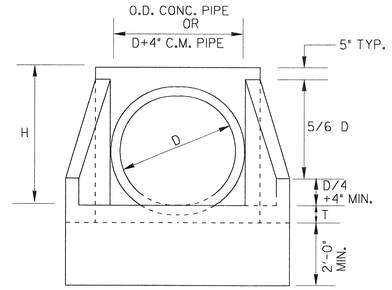

FRONT ELEVATION

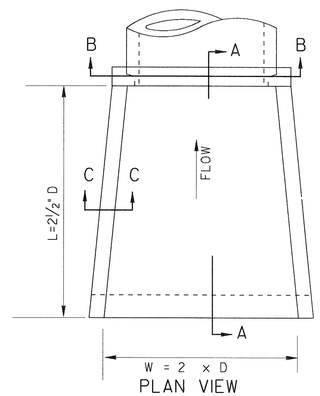

PLAN VIEW

D = INSIDE DIAMETER OF PIPE

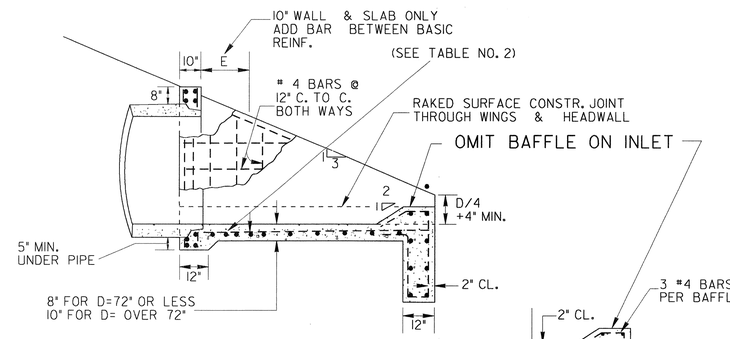

SECTION A-A

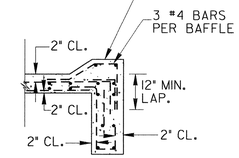

10" SLAB

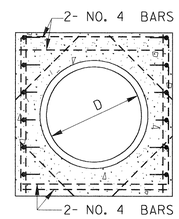

SECTION B-B
(SINGLE PIPE LINE)

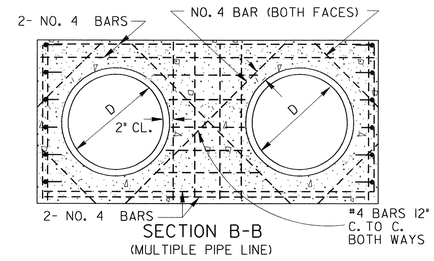

SECTION B-B
(MULTIPLE PIPE LINE)

TABLE NO. 1 - QUANTITIES FOR HEADWALLS											
	CU. YDS. CONCRETE (PAY QUANTITIES) ✳						LBS. STEEL (GIVEN FOR INFORMATION ONLY)				
	FOR SINGLE LINE			ADD FOR ADD'L LINE			FOR SINGLE LINE			ADD FOR EACH ADD'L LINE	
D	INLET	OUTLET		INLET	OUTLET		INLET	OUTLET		INLET	OUTLET
15"	0.87	0.93		0.60	0.66		102	113		73	83
18"	1.10	1.16		0.85	0.93		106	117		93	104
24"	1.61	1.69		1.29	1.37		127	138		124	134
30"	2.21	2.32		1.83	1.96		170	180		154	164
36"	2.92	3.05		2.49	2.63		238	254		196	212
42"	3.73	3.87		3.00	3.17		290	306		231	247
48"	4.62	4.80		3.58	3.74		335	351		265	281
54"	5.63	5.83		4.17	4.38		407	428		319	340
60"	6.72	6.95		4.82	5.01		456	477		360	391
72"	9.22	9.48		6.24	6.46		623	649		475	494
84"	14.84	15.19		9.05	9.29		1517	1539		1017	1044
96"	18.88	19.27		11.13	11.41		2118	2150		1323	1350

✳NOTE:
QUANTITIES SHOWN WILL BE ACTUAL PAY QUANTITIES FOR CLASS "A" CONCRETE, INCLUDING REINFORCED STEEL. NO ADJUSTMENT WILL BE MADE FOR AS BUILT QUANTITIES.

D - INSIDE DIAMETER OF PIPE CULVERT

H = D + 10" MIN. FOR C.M. PIPE

H = D + PIPE WALL THICKNESS + 8" FOR CONC. PIPE
(13/12 D + 9" TYP.)

T = 8" FOR D = 72" OR LESS
T = 10" FOR D = OVER 72"

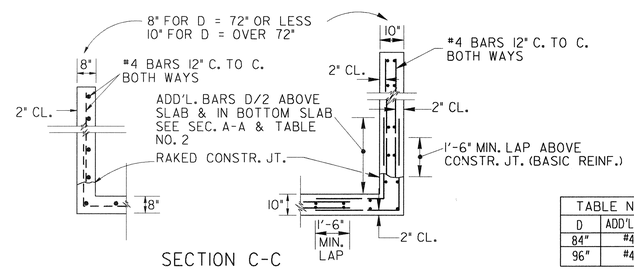

SECTION C-C

TABLE NO. 2		
D	ADD'L.BAR	E
84"	#4	5'
96"	#4	8'

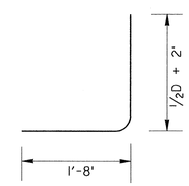

ADDITIONAL BAR DETAIL

AS-BUILT

DATE	REVISION	BY

DEPARTMENT OF TRANSPORTATION
STATE OF GEORGIA

STANDARD
TAPERED
INLET HEADWALL - OUTLET HEADWALL
(BUILT-IN-PLACE)

NO SCALE — REV. & REDR. OCT., 1999

DES. ____ DRW. ____ TRA. ____ CHK. ____

(SUBMITTED) STATE ROAD & AIRPORT DESIGN ENGR.
(APPROVED) CHIEF ENGINEER

NUMBER 1125