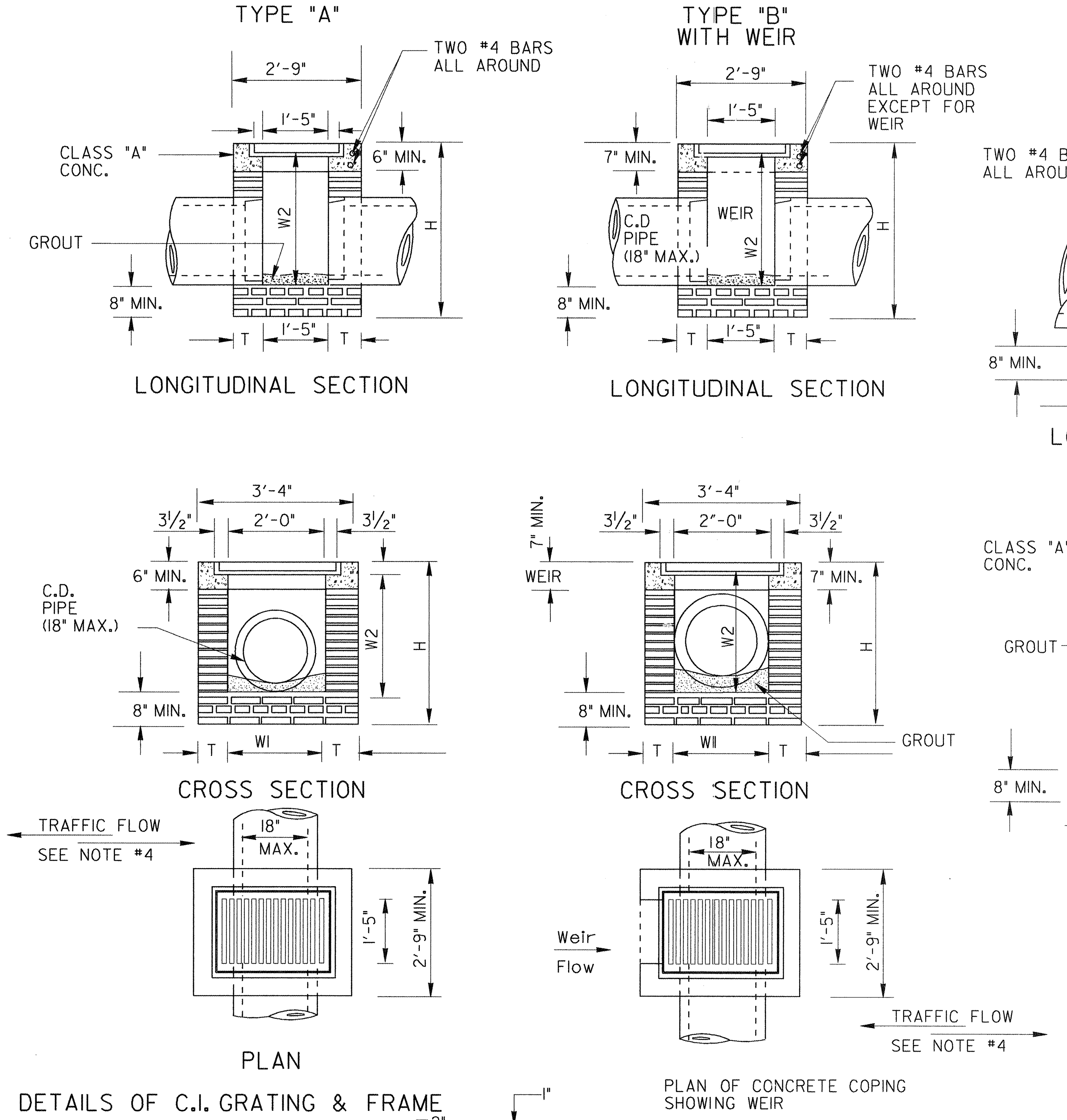

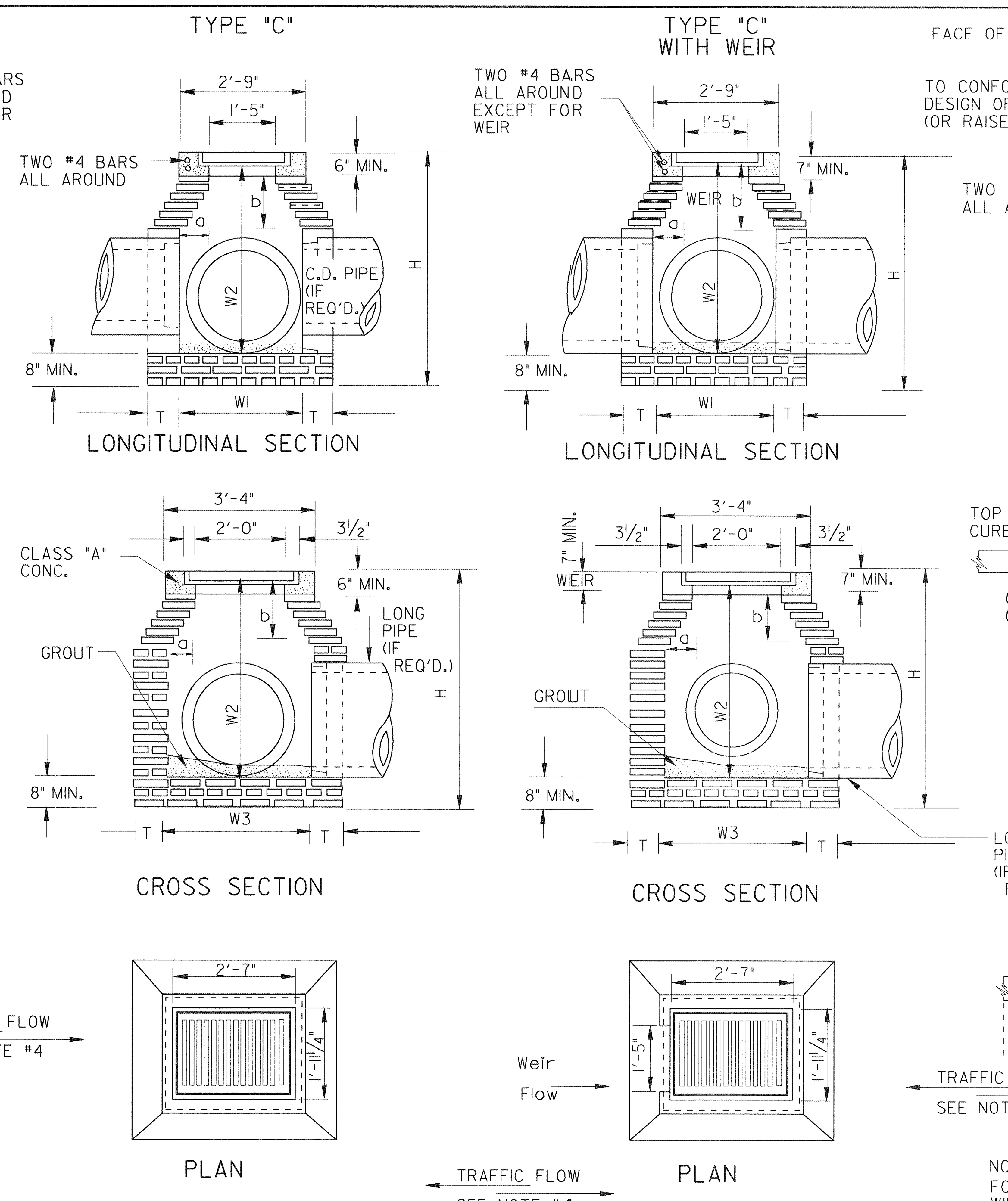

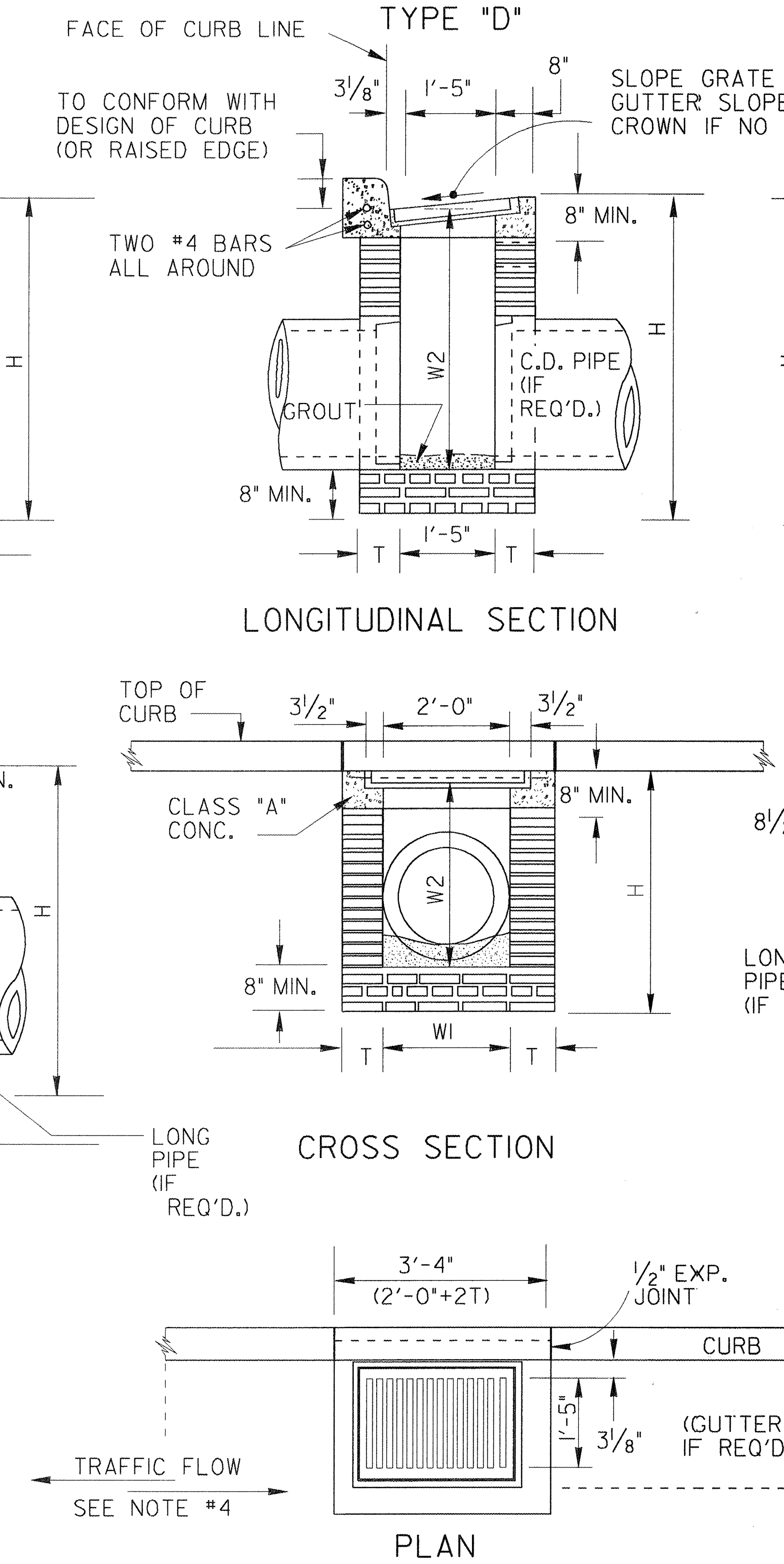

NOTE:
FOR LARGER PIPE SIZES, TYPE "D" DROP INLET BOX WILL HAVE DETAILS AND DIMENSIONS AS SHOWN FOR TYPE "C" INLETS.

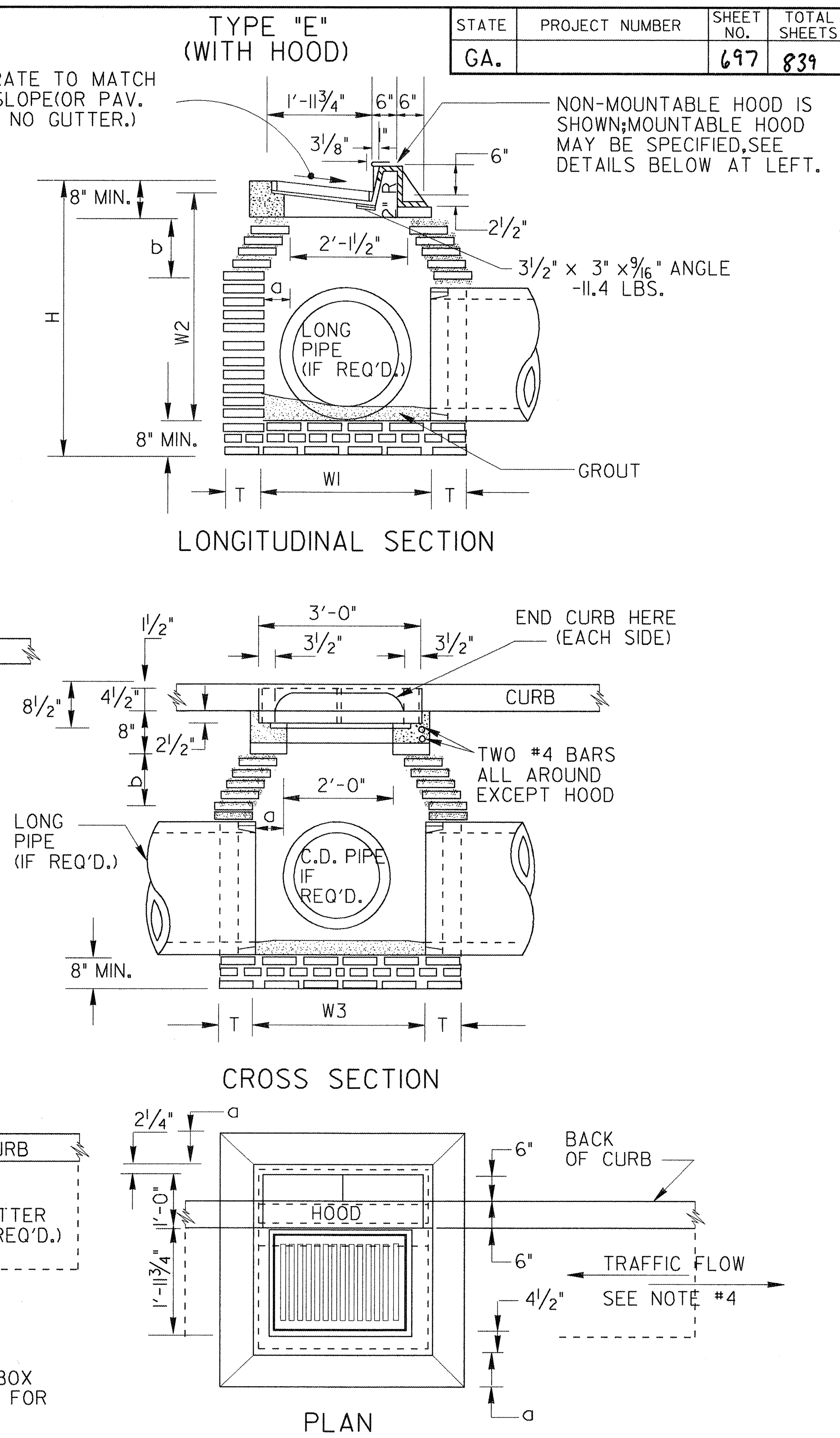

DETAILS OF C.I. GRATING & FRAME

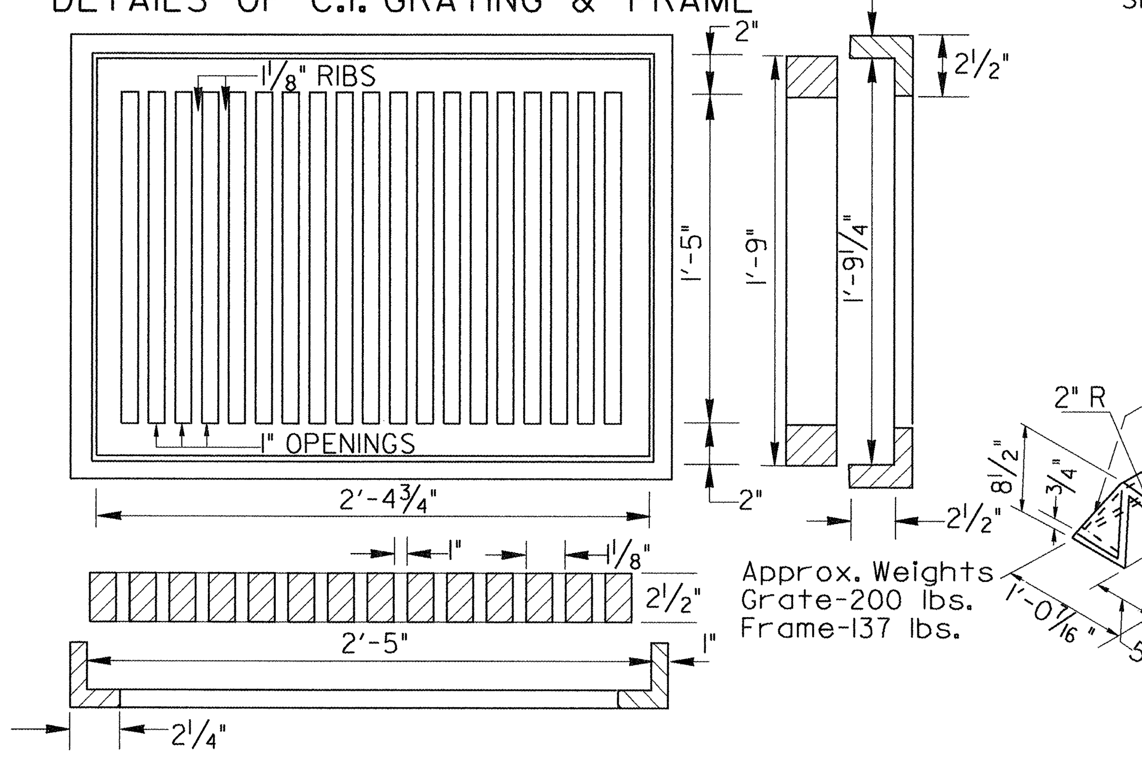

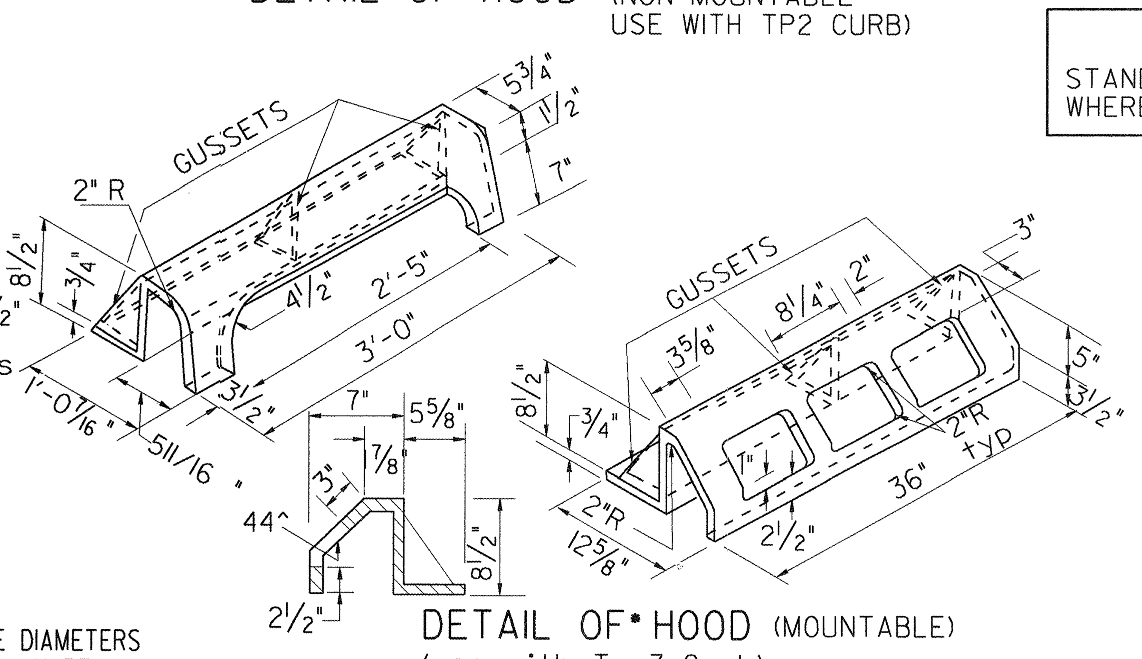

* CONTRACTOR SHALL SPECIFY EITHER MOUNTABLE OR NON-MOUNTABLE TO FOUNDRY IF HOOD IS REQUIRED.

SPECIAL NOTE:
STANDARD 1019A INLETS ARE FOR USE AT LOW POINTS & WHERE HYDRAULIC LOW CAPACITY GRATES ARE SUFFICIENT. WHERE HIGHER CAPACITY GRATES ARE NEEDED ON A CONTINUOUS GRADE, STANDARD 1019B IS RECOMMENDED.

BRICK WALL THICKNESSES
(FOR ALL TYPE INLETS)

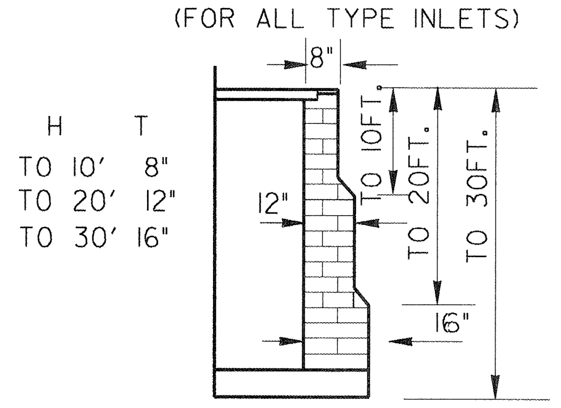

NOTE:
DETAILS NOT SHOWN FOR CONSTRUCTION ALTERNATES WILL BE SIMILAR TO THAT SHOWN FOR BRICK MASONRY.

CONSTRUCTION ALTERNATES

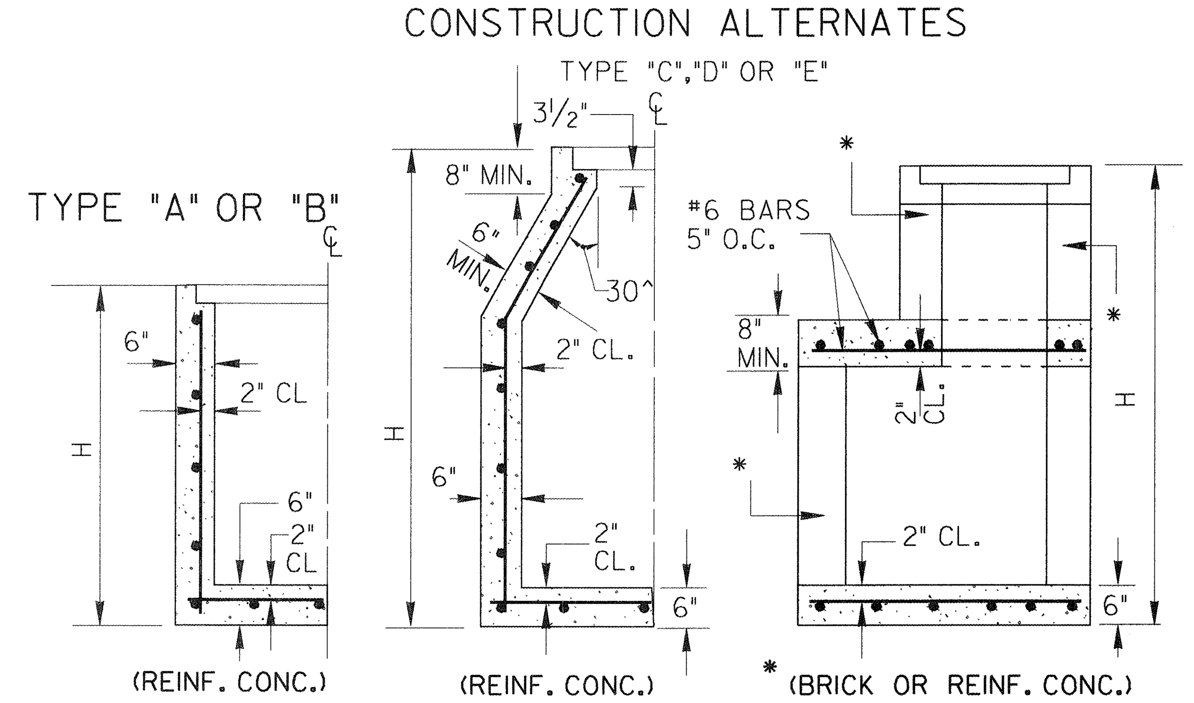

NOTE: CONCRETE WALLS WILL BE REINFORCED WITH #4 BARS 12" O.C. BOTH WAYS, BUT WHERE H IS OVER 9 FT., AND PIPE IS OVER 30" I.D., THE HORIZONTAL STEEL, WHICH IS MORE THAN 9 FT. DEEP WILL BE INCREASED TO 6" SPACINGS. 6" CONC. BOTTOM SLABS WILL BE REINFORCED WITH #4 BARS 12" O.C. BOTH WAYS.

NOTE: FOR PRECAST ALTERNATES, SEE STD. 1019-A PRECAST AND/OR STD. 1040 PRECAST AND BUILT-IN-PLACE COMPONENTS MAY BE USED IN COMBINATIONS WHICH PROVIDE PROPER FITS AND STRUCTURAL ADEQUACY.

NOTE:
MINIMUM DIMENSIONS GIVEN IN TABLE BELOW ARE BASED UPON TYPICAL OUTSIDE DIAMETERS OF CONCRETE PIPES WITH NORMAL COVER AND CLEARANCES, THESE DIMENSIONS MAY BE MODIFIED IF SO DETAILED IN THE PLANS OR AS DIRECTED BY THE ENGINEER, DIMENSIONS GIVEN ARE MINIMUM EXCEPT FOR "a" WHICH IS MAXIMUM.

TABLE OF MINIMUM DIMENSIONS FOR DROP INLETS

D	TYPES "A" or "B" BRICK OR REINF. CONC.			TYPE "C" OR "D" (BRICK)						TYPE "E" (BRICK)						TYPE "C","D" OR "E" (REINFORCED CONCRETE)						
	W1	W2	H(min)	W1	W2	W3	a (MAX.)	b	H(min.)	W1	W2	W3	a (MAX.)	b	H(min.)	W1 type "C"	W1 type "E"	W2	W3	a (MAX.)	b	H(min.)
15"	2'-0"	2'-7"	3'-3 1/2"	2'-2 1/8"	2'-11"	2'-9 1/8"	0'-4 9/16"	0'-7 7/8"	3'-9 1/2"	3'-2 1/8"	3'-1"	3'-0 5/8"	0'-7 9/16"	1'-1 1/8"	3'-11 1/2"	2'-0"	2'-1"	2'-7"	2'-0"	3 1/2"	6"	3'-6"
18"	2'-0"	2'-10"	3'-7"	2'-2 1/8"	3'-2 1/2"	2'-9 1/8"	0'-4 9/16"	0'-7 7/8"	4'-1"	3'-2 1/8"	3'-4 1/2"	3'-0 5/8"	0'-7 9/16"	1'-1 1/8"	4'-1"	2'-0"	2'-1"	3'-0"	2'-0"	3 1/2"	6"	3'-11"
24"	~	~	~	2'-8 1/8"	3'-3 1/8"	3'-3 1/8"	0'-7 9/16"	1'-1 1/8"	4'-9"	3'-2 1/8"	3'-11 1/2	3'-0 5/8"	0'-7 9/16"	1'-1 1/8"	4'-8 1/4"	2'-8"	2'-9"	3'-8"	2'-6"	6 1/2"	11 1/4"	4'-7"
30"	~	~	~	3'-7 1/4"	4'-0 1/4"	3'-10 1/16"	1'-0 1/8"	1'-9"	5'-10"	3'-5 1/2"	4'-8 3/8"	3'-4"	0'-8"	1'-1 7/8"	5'-6 7/8"	3'-4"	3'-6"	4'-9"	3'-0"	9 1/2"	16 1/2"	5'-10"
36"	~	~	~	4'-1 7/8"	6'-0 5/8"	4'-8 7/8"	1'-4 7/16"	2'-2 1/4"	6'-11 1/8"	3'-11 1/2	5'-8 9/16"	3'-10"	0'-11"	1'-7 1/16"	6'-7 1/16"	3'-10"	4'-0"	5'-10"	3'-9"	1'-2"	2'-0"	6'-10"
42"	~	~	~	4'-5"	7'-1 3/4"	5'-0"	1'-6"	2'-7 3/16"	8'-0 1/4"	4'-6 1/2"	7'-5 11/16"	4'-5"	1'-2 1/2"	2'-1 3/16"	8'-4 3/16"	4'-5"	4'-6"	7'-0"	4'-3"	1'-5"	2'-5 1/2"	7'-11"
48"	~	~	~	5'-0"	8'-2 3/4"	5'-7"	1'-9 1/2"	3'-1 1/4"	9'-1 1/4"	5'-1 1/2"	8'-6 11/16"	5'-0"	1'-6"	2'-7 3/16"	9'-5 3/16"	5'-0"	5'-0"	8'-2"	5'-0"	1'-9 1/2"	3'-1 1/2"	9'-2"
54"	~	~	~	5'-7"	9'-4"	6'-2"	2'-1"	3'-7 1/2"	10'-2 1/2"	5'-8 1/2"	9'-7 3/4"	5'-7"	1'-9 1/2"	3'-1 1/4"	10'-6 1/4"	5'-6"	5'-6"	9'-2"	5'-6"	2'-0 1/2"	3'-6 1/2"	10'-0"
60"	~	~	~	6'-2"	1'-4 7/8"	6'-9"	2'-4 1/2"	4'-1 3/8"	11'-3 1/4"	6'-3 1/2"	10'-8 13/16"	6'-2"	2'-1"	3'-7 5/16"	1'-7 5/16"	6'-0"	6'-0"	10'-3"	6'-0"	2'-3 1/2"	4'-0"	11'-1"

GENERAL NOTES:

1. SPECIFICATIONS: GEORGIA STANDARD AND CURRENT EDITION, AND SUPPLEMENTS THERETO.

2. 1/2" EXPANSION JOINT WILL BE REQUIRED WHERE RIGID PAVEMENT, CONCRETE SIDEWALK OR CONCRETE GUTTER MEETS DROP INLETS.

3. ALIGNMENT, NUMBER AND SIZES OF PIPES SHOWN ARE ONLY TYPICAL, SEE PLANS FOR ACTUAL PIPE CULVERT REQUIREMENTS.

4. ALL TYPE DROP INLETS WILL BE CONSTRUCTED (AS SHOWN), SO THAT THE GRATE BARS ARE PERPENDICULAR TO THE FLOW OF TRAFFIC EXCEPT ON LIMITED ACCESS PROJECTS OR WHERE BICYCLES ARE PROHIBITED.

5. BRICK MASONRY WITH CLASS "A" CONC. TOP PORTION IS SHOWN AS STANDARD CONSTRUCTION WITH ALTERNATES PERMITTED AS SHOWN, BOTTOM SLAB MAY BE 8" MIN. NON-REINFORCED CONCRETE, 8" BRICK OR 6" MIN. REINFORCED CONCRETE, SEE APPLICABLE STANDARDS FOR ALTERNATE PRECAST CONSTRUCTION.

STATE	PROJECT NUMBER	SHEET NO.	TOTAL SHEETS
GA.		697	839

AS-BUILT

DEPARTMENT OF TRANSPORTATION
STATE OF GEORGIA

STANDARD DROP INLETS (BUILT-IN-PLACE)

SCALE AS SHOWN — REV. & REDR. AUG., 1999

DES. ___ REV. ___ TRA. ___ CHK. ___

(SUBMITTED) James A. Kennedy — STATE ROAD & AIRPORT DESIGN ENGR.
(APPROVED) [signature] — CHIEF ENGINEER

NUMBER 1019A

6/7/2006 11:00:07 AM \\GDOT-DSN1\GOPLOT\QCF\go_tiff_output.qcf gowens M:\GARY\1019A FIX\1019A.prf