STATE	PROJECT NUMBER	SHEET NO.	TOTAL SHEETS
GA.	CSNHS-0008-00(232)	610	839

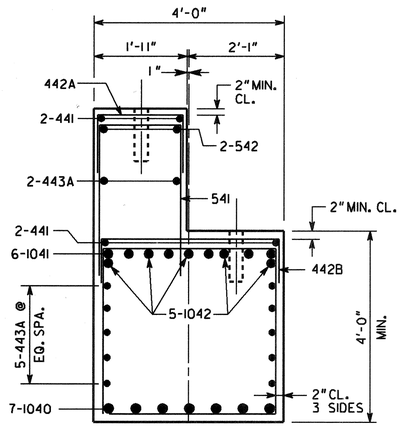

SECTION A-A

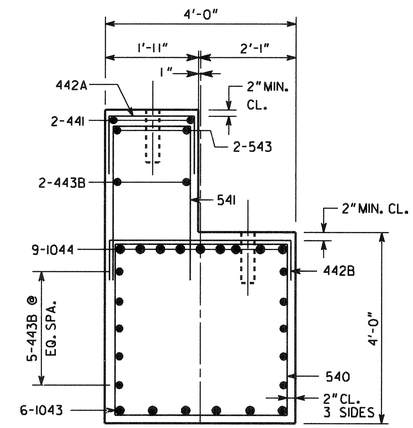

SECTION B-B

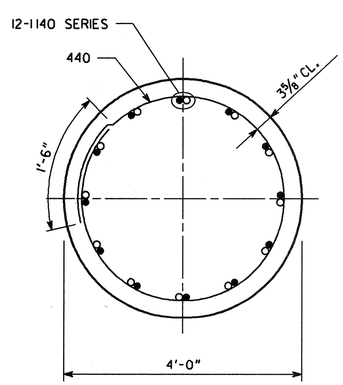

SECTION D-D

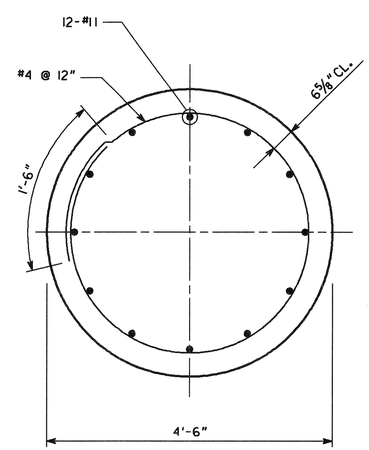

SECTION E-E

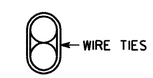

BARS TO BE BUNDLED SHALL BE BUNDLED VERTICALLY

BUNDLING DETAIL

APPROVED FOR CONSTRUCTION 10/4/07

BRIDGE NO. 2

ARCADIS
2849 PACES FERRY ROAD, SUITE 400
ATLANTA, GEORGIA 30339
TEL: 770/431-8666 FAX: 770/435-2666

GEORGIA
DEPARTMENT OF TRANSPORTATION
PRECONSTRUCTION DIVISION-OFFICE OF BRIDGE DESIGN

BENTS 4 & 5 DETAILS
KIA PARKWAY OVER LONG CANE CK.

TROUP COUNTY — CSNHS-0008-00(232)

SCALE: NO SCALE — JULY 2007

DESIGNED	RHC	CHECKED	JPT	REVIEWED	WMD
DRAWN	MLF	DESIGN GROUP	SWW	APPROVED	PVL

REVISIONS — BY — DATE

BRIDGE SHEET 17 OF 21

AS-BUILT

PLAN DATE: 01-25-08

Filename: g:\tro\63732-kia\bridge\find\bridge 2\63732b2-bt45b.dgn
User Name: MLF Date: 1/24/2008 Time: 8:28:00 AM