STATE	PROJECT NUMBER	SHEET NO.	TOTAL SHEETS
GA.	CSNHS-0008-00(232)	576	839

DIMENSION "D" IS MEASURED FROM TOP OF SLAB TO TOP OF BEAMS AT CENTERLINE BEARING. VARY "D" BETWEEN BEARINGS TO COMPENSATE FOR DEAD LOAD DEFLECTION AND VERTICAL CURVE. MAINTAIN A CONSTANT SLAB THICKNESS OF 7¾" BETWEEN BEAMS AND 9" AT THE OVERHANGS.
"D" = 9" FOR INTERIOR BEAMS
"D" = 10¾" FOR EXTERIOR BEAMS

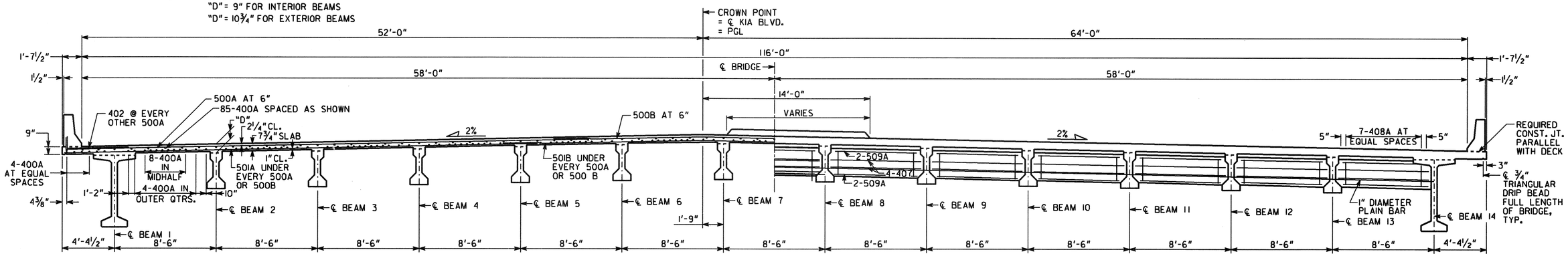

SECTION THRU SLAB

SECTION THRU DIAPHRAGM

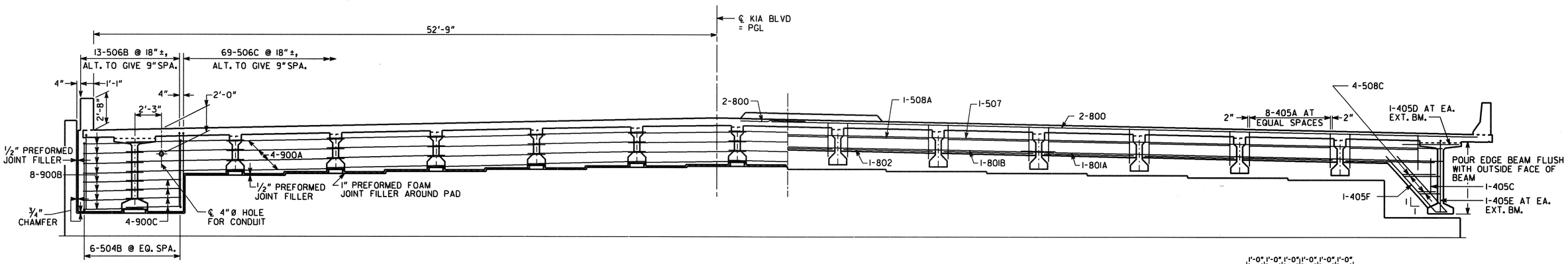

SECTION THRU ENDWALL

SECTION THRU EDGE BEAM

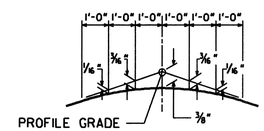

CROWN DETAIL
2% CROSS SLOPE

LAP LENGTHS	
BAR SIZE	LAP LENGTH
#4	1'-6"
#5	1'-9"
#8	3'-0"

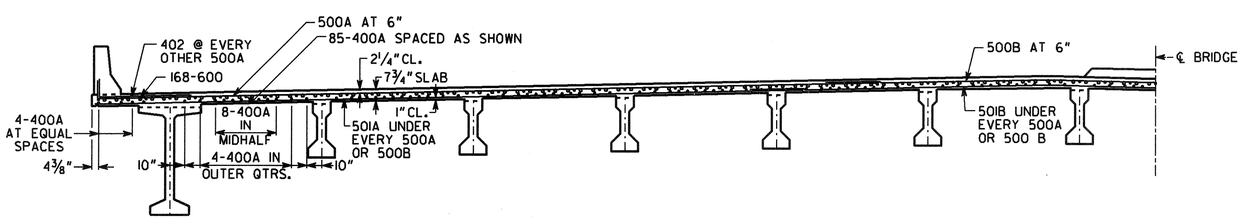

SECTION THRU SLAB AT INTERMEDIATE BENT

NOTE:

1) PLACE 500A, 500B, 501A, 501B AND 402 BARS PARALLEL TO BENTS.

2) MAINTAIN 2" COVER ON ALL REINFORCING UNLESS NOTED.

3) TOP OF MEDIAN MATCHES DECK CROSS-SLOPE.

4) PROVIDE 4" Ø HOLE FOR CONDUIT IN EDGE BEAM AND DIAPHRAGMS BETWEEN BEAMS 1 AND 2.

APPROVED FOR CONSTRUCTION 1/19/08

BRIDGE NO. 1

ARCADIS
2849 PACES FERRY ROAD, SUITE 400
ATLANTA, GEORGIA 30339
TEL: 770/431-8666 FAX: 770/435-2666

GEORGIA
DEPARTMENT OF TRANSPORTATION
PRECONSTRUCTION DIVISION-OFFICE OF BRIDGE DESIGN

DECK SECTIONS SPANS 1 & 4
CR 98 (KIA BOULEVARD) OVER I-85

TROUP COUNTY — CSNHS-0008-00(232)

SCALE: NO SCALE — JULY 2007

DESIGNED	JPT	CHECKED	RHC	REVIEWED	WMD
DRAWN	MLF	DESIGN GROUP	SWW	APPROVED	PVL

BY | REVISIONS | DATE

BRIDGE SHEET 4 OF 20

AS-BUILT

PLAN DATE: 01-25-08

Filename: gx\tro\63732-kia\bridge\final\bridge_1\63732bl-ds14.dgn
Date: 1/24/2008 Time: 8:30:40 AM
User Name: MLF