STATE	PROJECT NUMBER	SHEET NO.	TOTAL SHEETS
GA.	CSNHS-0008-00(232)		

NOTES:

1. * ELEVATIONS SHOWN ARE AT THE TOP OF THE WALL AND ARE TO BE VERIFIED DURING DESIGN BUILD PHASE.
2. ** BOTTOM ELEVATIONS OF WALL TO BE VERIFIED DURING DESIGN BUILD PHASE.
3. OFFSETS ARE MEASURED FROM P.G.L. OF WEBB ROAD TO FRONT FACE OF WALL.
4. FOR BARRIER DETAILS, SEE GA. STD. 4948A.
5. USE OF SOIL NAIL TYPE WALL WILL NOT BE ALLOWED FOR WALL NO. 3.

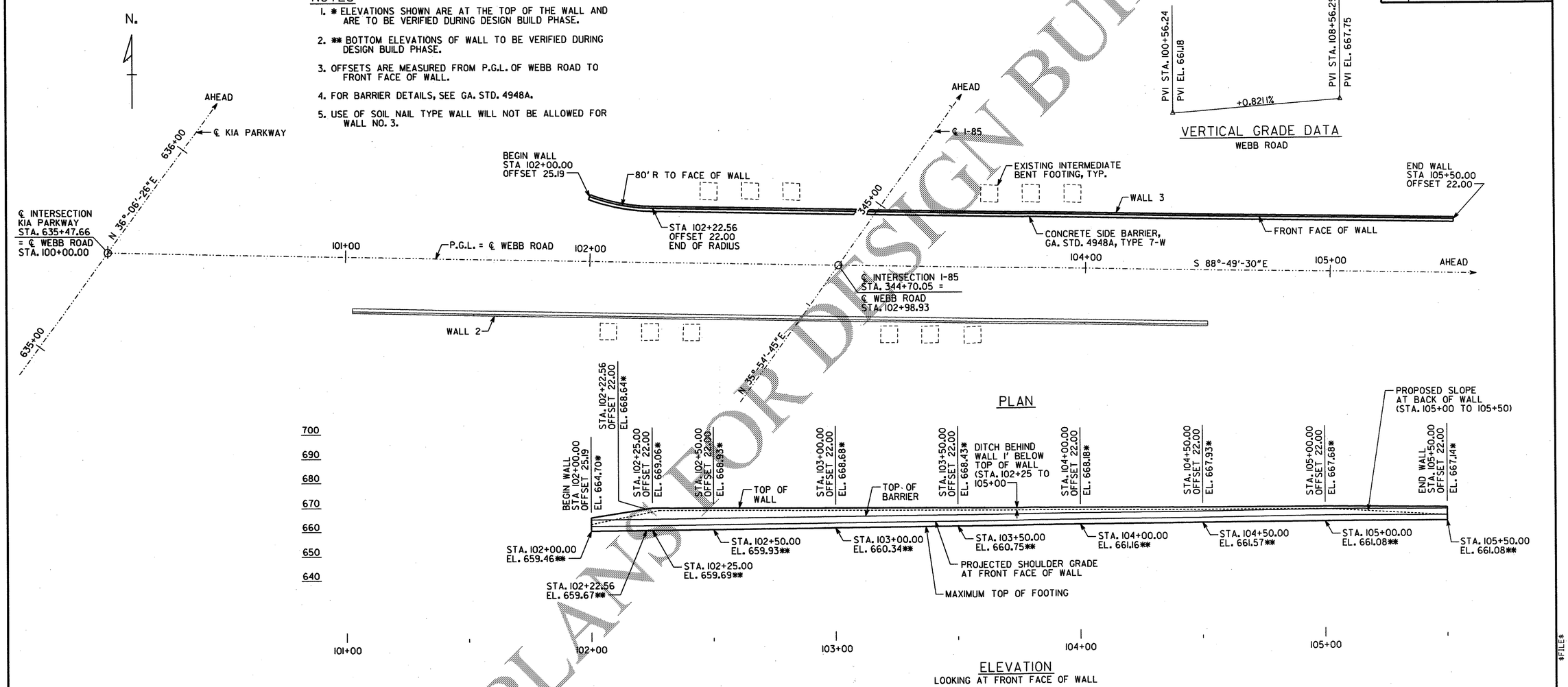

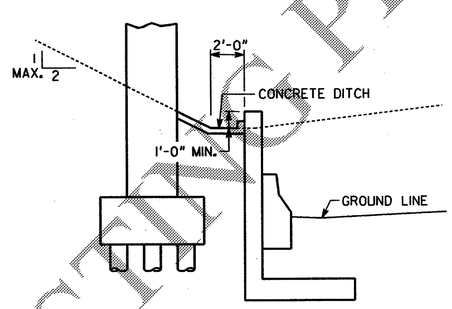

TYPICAL SECTION
L-SHAPE WALL
NO SCALE

PROJECT P.I. NO. 0008232

WALL NO. 3

GEORGIA
DEPARTMENT OF TRANSPORTATION
PRECONSTRUCTION DIVISION-OFFICE OF BRIDGE DESIGN

WALL NO. 3 PLAN AND ELEVATION
I-85 INTERCHANGE AT
CR 98/GABBETTVILLE ROAD
TROUP COUNTY CSNHS-0008-00(232)

SCALE: 1"=20'-0" FEBRUARY 2007

JORDAN JONES & GOULDING

NOT RELEASED FOR CONSTRUCTION

31.04

DATE	REVISIONS	BY

JOB NO. 2077-904 | WALL SHEET 4 OF 4

DESIGNED LSW | CHECKED RJS/DWC | REVIEWED WMD
DRAWN RAR | DESIGN GROUP SWW | APPROVED PVL

GEORGIA REGISTERED No. 29316 PROFESSIONAL ENGINEER LISA S. WOODS 2/19/07

$FILE$ 5:56:09 PM 2/19/2007

COSTING PLANS FOR DESIGN BUILD