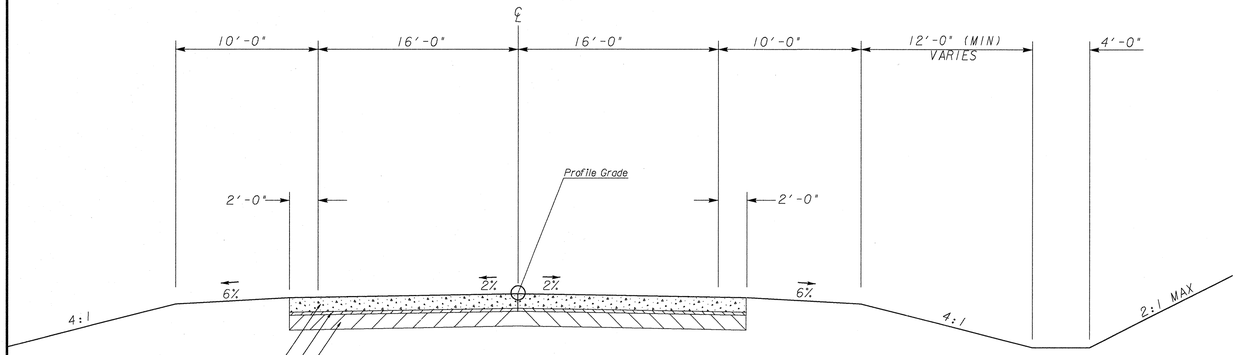

TYPICAL SECTION NO. 10

TRUCK ROAD I TANGENT SECTION

STA. 10+00.00 TO STA. 13+90.00

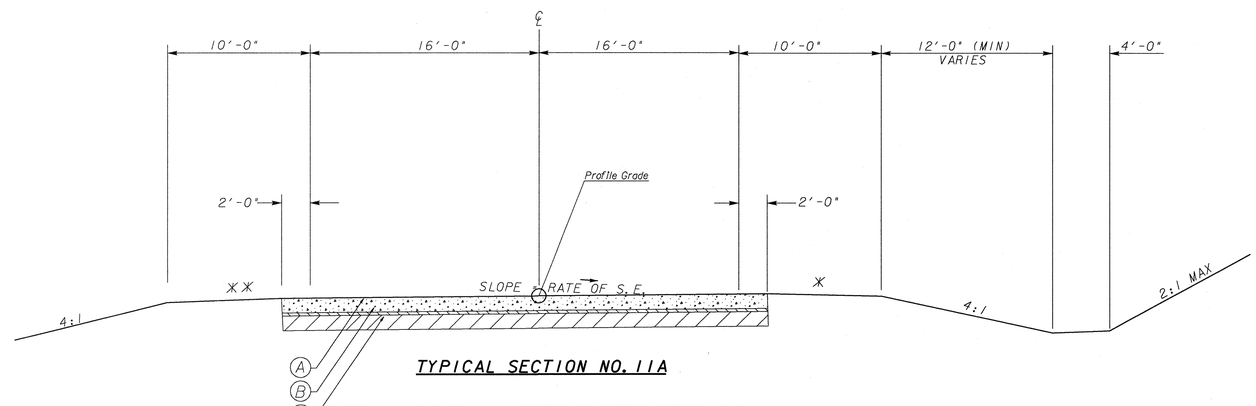

TYPICAL SECTION NO. 11A

TRUCK ROAD I SUPERELEVATED SECTION

STA. 13+90.00 TO STA. 14+04

PAVEMENT REQUIREMENTS

(A) PCC (w/ 1¼" dowels), 12"

(B) 330 lb/sy 19 mm RECYCLED ASPH. CONC

(C) 12" GRADE AGGREGATE BASE

(USE SAME MATERIAL FOR MAINLINE & SHOULDER)

* SHOULDER TO SLOPE AT NORMAL RATE, HOWEVER, THE ALGEBRAIC DIFFERENCE IN PAVING SLOPE AND SHOULDER SLOPE SHALL NOT EXCEED 8%. MINIMUM SHOULDER SLOPE TO BE 2%.

** SHOULDER TO SLOPE AT NORMAL RATE OR SUPERELEVATION RATE, WHICHEVER IS GREATER.

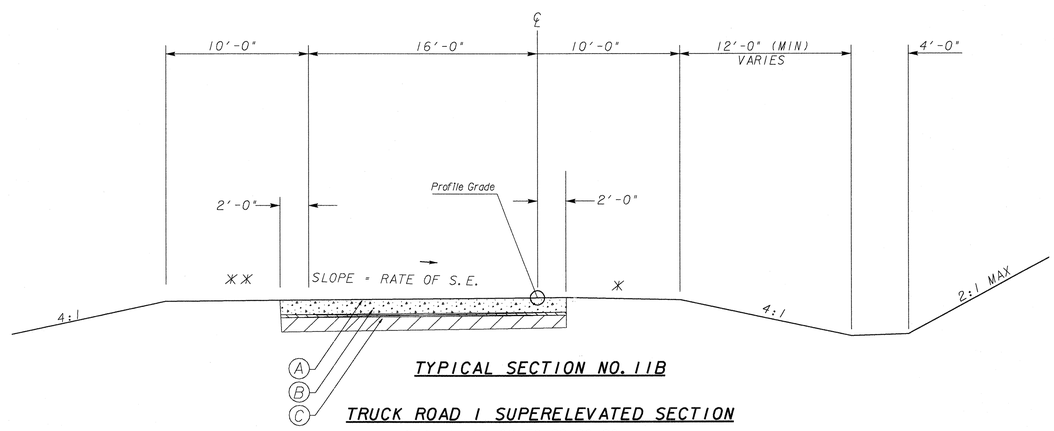

TYPICAL SECTION NO. 11B

TRUCK ROAD I SUPERELEVATED SECTION

STA. 14+04.00 TO 20+00.00

ARCADIS

Infrastructure, environment, facilities

REVISION DATES		

STATE OF GEORGIA
DEPARTMENT OF TRANSPORTATION

OFFICE: URBAN DESIGN

TYPICAL SECTIONS

I-85 INTERCHANGE
AT CR 98/GABBETTVILLE RD

DRAWING No. 5-06

AS-BUILT

PLAN DATE: 09-07-07