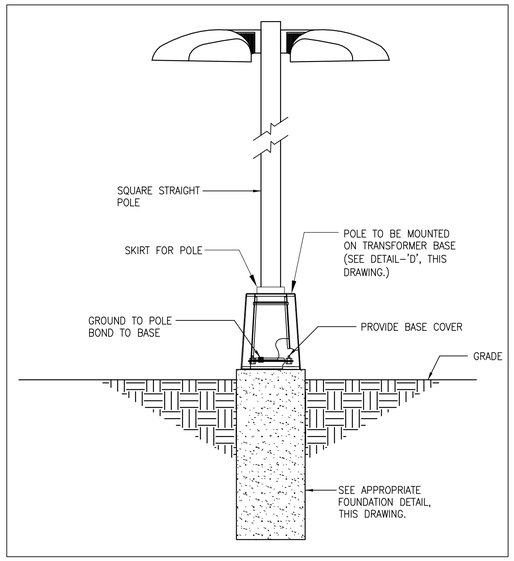

DETAIL-'A'
(N.T.S.)
(TWO LUMINARIES MOUNTED 180°)

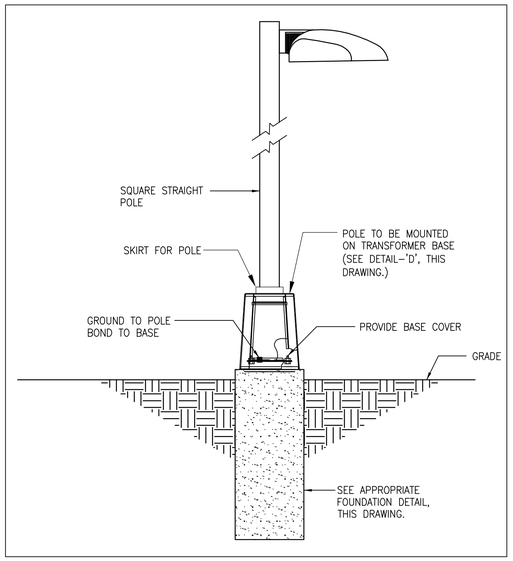

DETAIL-'B'
(N.T.S.)
(ONE LUMINAIRE)

GENERAL NOTES

1. OPERATING VOLTAGE FOR PARKING LOT LUMINAIRES SHALL BE 240 VOLTS.
2. ALL BALLASTS SHALL BE CONSTANT WATTAGE AUTO REGULATOR TYPE.
3. PROVIDE FUSES IN THE LIGHTING CIRCUIT INSIDE THE HANDHOLES. ALL FUSES AND FUSE HOLDERS SHALL BE IN-LINE TYPE AND WATERPROOF.
4. CONDUIT ACCESSORIES, SUCH AS CONDULETS, ELBOWS, FLEXIBLE CONDUIT, ETC., SHALL BE INCLUDED IN THE PRICE BID FOR CONDUIT.
5. THE LIGHTING CONTRACTOR SHALL FURNISH A ONE YEAR WRITTEN WARRANTY FOR PARTS AND DEFECTIVE WORKMANSHIP ON THE LUMINAIRES. WARRANTY PERIOD TO START WHEN THE PARK AND RIDE IS PLACED INTO SERVICE. CONTRACTOR TO PROVIDE ALL WARRANTY DOCUMENTATION AT COMPLETION OF PROJECT.
6. THE CONTRACTOR SHALL BE AWARE OF OVERHEAD POWER LINES AND UNDERGROUND UTILITIES AND LOCATE LIGHTING STANDARDS SUCH THAT THEY WILL HAVE TEN FEET MINIMUM CLEARANCE FROM DISTRIBUTION LINES OR 20 FEET MINIMUM CLEARANCE FROM TRANSMISSION LINES.
7. THE CONTRACTOR SHALL COORDINATE WITH GEORGIA POWER COMPANY REP. MR. JAMES Q. JACKSON III (770-254-7117) FOR POWER SERVICE.
8. CONTRACTOR SHALL SEND AS-BUILT CONDUIT LAYOUT DRAWINGS FOR BOTH LIGHTING AND COMMUNICATION PLANS TO THE GDOT CONSTRUCTION OFFICE.
9. ALL CIRCUITS AND CONDUITS MUST BE CLEARLY LABELED AT EACH JUNCTION AND TERMINATION POINT. THE WIRE MARKERS SHALL BE PVC HEAT SHRINKABLE TUBULAR TYPE AND SHOW THE CIRCUIT NUMBER.
10. ALL CONDUITS MUST BE SEALED AFTER INSTALLATION OF WIRES AND SUCCESSFUL TESTING OF THE CIRCUITS. THE SEALING COMPOUND SHALL BE OZ/GEDNEY TYPE 'DUX' OR APPROVED EQUAL.
11. THE CONTRACTOR SHALL COORDINATE THE EXACT LOCATION OF TRANSFORMER WITH UTILITY CO.
12. ALL DETAILS SHOWING DIMENSIONS MUST BE FOLLOWED WITHOUT EXCEPTION OR DEVIATION. ANY DEVIATION TO THE DESIGN DRAWINGS MUST BE APPROVED IN WRITING BY THE GDOT ENGINEER.
13. PRIOR TO INSTALLATION, ALL LIGHT POLE MANUFACTURERS MUST MEET GDOT OFFICE OF MATERIALS AND RESEARCH, QUALIFIED PRODUCTS LIST (QPL) CRITERIA FOR APPROVED LIGHTING STANDARD FABRICATORS. LIGHT POLE SUBMITTALS MUST HAVE STAMPED APPROVAL BY THE OFFICE OF DESIGN POLICY AND SUPPORT, GDOT LIGHTING DESIGN GROUP.
14. PRIOR TO INSTALLATION, THE CONTRACTOR SHALL SUBMIT THE ANCHOR BOLTS USED IN THE CONSTRUCTION OF LIGHT POLE FOUNDATIONS TO THE GDOT OFFICE OF MATERIALS AND RESEARCH FOR APPROVAL. THE USE OF ANCHOR BOLTS NOT HAVING THE APPROVAL OF OMR SHALL, AT THE DISCRETION OF GDOT, BE REMOVED AND REPLACED AT CONTRACTOR COST.
15. PRIOR TO INSTALLATION, ALL LUMINAIRE SUBMITTALS MUST MEET GDOT STANDARD SPECIFICATIONS FOR CONSTRUCTION CRITERIA AND MUST HAVE STAMPED APPROVAL BY THE OFFICE OF DESIGN POLICY AND SUPPORT, GDOT LIGHTING DESIGN GROUP.
16. CONTRACTOR SHALL ENSURE THAT THE LIGHT POLE SELECTED SHALL MATCH THE DIMENSIONS SHOWN ON 'DETAIL-D' TRANSFORMER BASE."
17. CONTRACTOR SHALL ENSURE THAT THE POLE MANUFACTURER ALSO SUPPLY THE TRANSFORMER BASE.
18. ALL SCHEDULE 40 PVC CONDUIT SHALL BE BURIED AT A DEPTH OF 40" UNLESS OTHERWISE NOTED.
19. WHEN AN UNDERGROUND PVC CONDUIT IS TO BE STUBBED UP INTO THE LIGHT POLE BASE, PROVIDE A PVC ELBOW.
20. WHEN AN UNDERGROUND PVC CONDUIT IS TO BE STUBBED UP AND EXTENDED EXPOSED, PROVIDE A PVC TO STEEL ADAPTER AND RIGID GALVANIZED STEEL ELBOW. ALL ABOVE GROUND EXPOSED CONDUIT EXTENSIONS SHALL BE RIGID GALVANIZED STEEL.
21. ALL THE CONDUIT ENDS SHALL BE PROVIDED WITH BUSHINGS.
22. ALL THE STUBBED UP CONDUITS EXPOSED TO ELEMENTS SHALL BE PROVIDED WITH THREADED INSERT PLUGS DURING CONSTRUCTION TO PREVENT ENTRANCE OF WATER AND DEBRIS. THE SPARE CONDUITS SHALL ALSO BE PROVIDED WITH SIMILAR PLUGS.
23. CONTRACTOR SHALL REFER TO THE SECTION 16 ELECTRICAL SPECIFICATIONS IN APPENDIX-A TO SPECIAL PROVISION SECTION 763 WHICH ARE APPLICABLE TO THESE LIGHTING DRAWINGS.
24. CONTRACTOR SHALL AFFIX A STAMP TO THE SHOP DRAWING SUBMITTAL ATTESTING THAT THE SUBMITTAL HAS BEEN REVIEWED PRIOR TO SUBMITTING TO ENGINEER. APPROVAL OF SHOP DRAWINGS BY THE ENGINEER DOES NOT RELIEVE THE CONTRACTOR FROM MEETING THE CONTRACT REQUIREMENTS.

LEGEND

- LIGHTING CONDUIT, SCHEDULE 40 PVC
- CONCRETE ENCASED CONDUIT
- (1) LUMINAIRE NUMBER (REFERENCED ON DWGS. 25-02 & 25-03 FOR CIRCUITING.)
- JUNCTION BOX
- COMMUNICATION CONDUIT, SCHEDULE 40 PVC
- T1 TELEPHONE CALL BOX, NUMBER AS SHOWN.

LIGHT FIXTURE SCHEDULE

A2
- LUMINAIRE: TWO 400W MH LUMINAIRE, 240V BALLAST LITHONIA-AERIS #AS2 400M SR4W 240 SPADM28ASLPI OR ENGINEER APPROVED EQUAL.
- FINISH: COLOR TO BE BRONZE.
- POLE: 30' SQUARE STEEL POLE LITHONIA #SSS306GDM28ASDDB OR ENGINEER APPROVED EQUAL. (ALUMINUM POLE IS ACCEPTABLE)

A1
- LUMINAIRE: ONE 400W MH LUMINAIRE, 240V BALLAST LITHONIA-AERIS #AS2 400M SR4W 240 SPADM19ASLPI OR ENGINEER APPROVED EQUAL.
- FINISH: COLOR TO BE BRONZE.
- POLE: 30' SQUARE STEEL POLE LITHONIA #SSS306GDM19ASDDB OR ENGINEER APPROVED EQUAL. (ALUMINUM POLE IS ACCEPTABLE)

B2
- LUMINAIRE: TWO 400W MH LUMINAIRE, 240V BALLAST LITHONIA-AERIS #AS2 400M SR4SC 240 SPADM28ASLPI OR ENGINEER APPROVED EQUAL.
- FINISH: COLOR TO BE BRONZE.
- POLE: 30' SQUARE STEEL POLE LITHONIA #SSS306GDM28ASDDB OR ENGINEER APPROVED EQUAL. (ALUMINUM POLE IS ACCEPTABLE)

B1
- LUMINAIRE: ONE 400W MH LUMINAIRE, 240V BALLAST LITHONIA-AERIS #AS2 400M SR4SC 240 SPADM18ASLPI OR ENGINEER APPROVED EQUAL.
- FINISH: COLOR TO BE BRONZE.
- POLE: 30' SQUARE STEEL POLE LITHONIA #SSS306GDM18ASDDB OR ENGINEER APPROVED EQUAL. (ALUMINUM POLE IS ACCEPTABLE)

C2
- LUMINAIRE: TWO 400W MH LUMINAIRE, 240V BALLAST LITHONIA-AERIS #AS2 400M SR3 240 SPADM29ASLPI OR ENGINEER APPROVED EQUAL.
- FINISH: COLOR TO BE BRONZE.
- POLE: 30' SQUARE STEEL POLE LITHONIA #SSS306GDM29ASDDB OR ENGINEER APPROVED EQUAL. (ALUMINUM POLE IS ACCEPTABLE)

C1
- LUMINAIRE: ONE 400W MH LUMINAIRE, 240V BALLAST LITHONIA-AERIS #AS2 400M SR3 240 SPADM19ASLPI OR ENGINEER APPROVED EQUAL.
- FINISH: COLOR TO BE BRONZE.
- POLE: 30' SQUARE STEEL POLE LITHONIA #SSS306GDM19ASDDB OR ENGINEER APPROVED EQUAL. (ALUMINUM POLE IS ACCEPTABLE)

DESIGN CRITERIA

THE CONTRACTOR SHALL SUBMIT PHOTOMETRIC DATA AND DESIGN CALCULATIONS FOR THE LUMINAIRES, TO VERIFY THE LIGHTING DESIGN CRITERIA. IES FILES USED IN THE DESIGN CALCULATIONS MUST BE SUBMITTED.

LIGHTING DESIGN CRITERIA:

LIGHT LOSS FACTOR = 0.7

AVERAGE MAINTAINED ILLUMINATION = 1.9fc

UNIFORMITY RATIO (AVG./MIN.) = 4:1 MAXIMUM

UNIFORMITY RATIO (MAX./MIN/) = 15:1 MAXIMUM

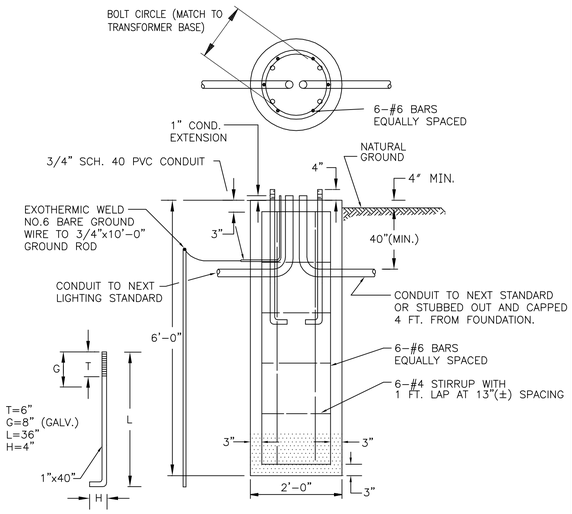

MATERIAL = AASHTO M314 GRADES 55 S-1

ANCHOR BOLT DETAIL
N.T.S.

DETAIL-C
FOUNDATION FOR POLE
N.T.S.

(DETAIL FOR ALL POLES OUTSIDE OF PARKING AREA)
PRICE TO BE INCLUDED WITH THE 'LIGHTING STANDARD'

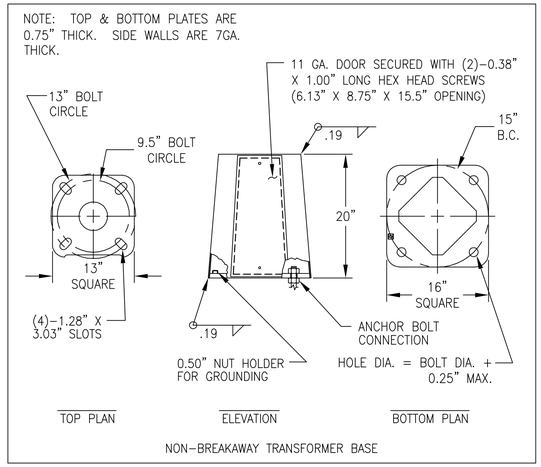

TRANSFORMER BASE MATERIAL SHALL MATCH THAT OF THE LIGHT POLE.

DETAIL-'D'
TRANSFORMER BASE DETAIL
N.T.S.
(REQUIRED FOR EACH POLE)
PRICE TO BE INCLUDED WITH THE 'LIGHTING STANDARD'

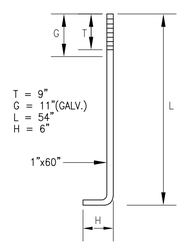

MATERIAL = ASHTO M314 GRADES 55-S1

ANCHOR BOLT DETAIL

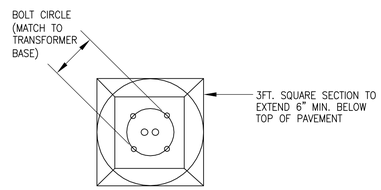

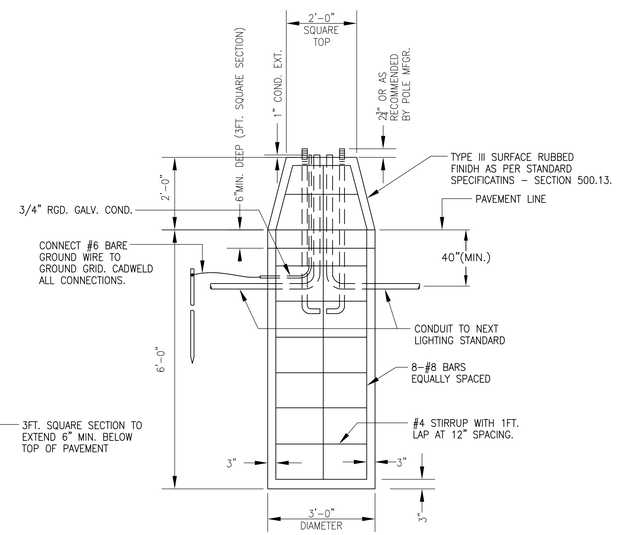

DETAIL-'E'
FOUNDATION DETAIL FOR PARKING AREA LIGHTING STANDARD

(THIS DETAIL APPLIES TO THE POLES ASSOCIATED W/LUMINARES 6/7, 8/9, 18/19, 22/23, 31/32.)
PRICE TO BE INCLUDED WITH THE 'LIGHTING STANDARD'

© 2009
ATLANTA CONSULTING ENGINEERS, INC.
ALL RIGHTS RESERVED

THESE CONSTRUCTION DOCUMENTS AND PERMITTED REPRODUCTIONS, IN WHOLE OR IN PART, ARE INSTRUMENTS OF SERVICE AND ARE THE SOLE PROPERTY OF ATLANTA CONSULTING ENGINEERS, INC. UNLESS OTHERWISE AGREED TO. THESE DOCUMENTS MAY NOT BE REPRODUCED OR CONVEYED IN ANY MANNER NOR ARE THEY TO BE USED FOR ANY OTHER PROJECTS OTHER THAN THAT SPECIFICALLY INDICATED HEREIN WITHOUT WRITTEN PERMISSION FROM AND DUE COMPENSATION TO ATLANTA CONSULTING ENGINEERS, INC.

ATLANTA CONSULTING ENGINEERS
500 SUN VALLEY DRIVE
UNIT G2
ROSWELL, GEORGIA 30076
bal@ace.fdn.com
Tel: 678-205-2240
Fax: 678-205-2239

URS
400 Northpark Town Center
1000 Abernathy Road N.E., Suite 900
Atlanta, Georgia 30328
Tel: (678) 808-8800, Fax: (678) 808-8400

GRAPHIC SCALE
0
(IN FEET)
1 inch = ft.

REVISIONS

STATE OF GEORGIA
DEPARTMENT OF TRANSPORTATION
OFFICE OF INNOVATIVE PROGRAM DELIVERY

Electrical Legend, Notes, Light Fixture Schedule and Details

NEWNAN SR 34 AND HOLLZ PKWY
PARK AND RIDE LOT

25-01
DRAWING No.