COUNTY	PROJECT NUMBER	SHEET NO.	TOTAL SHEETS
COWETA	CSMSL-0007-00(956)	26	106

VOID

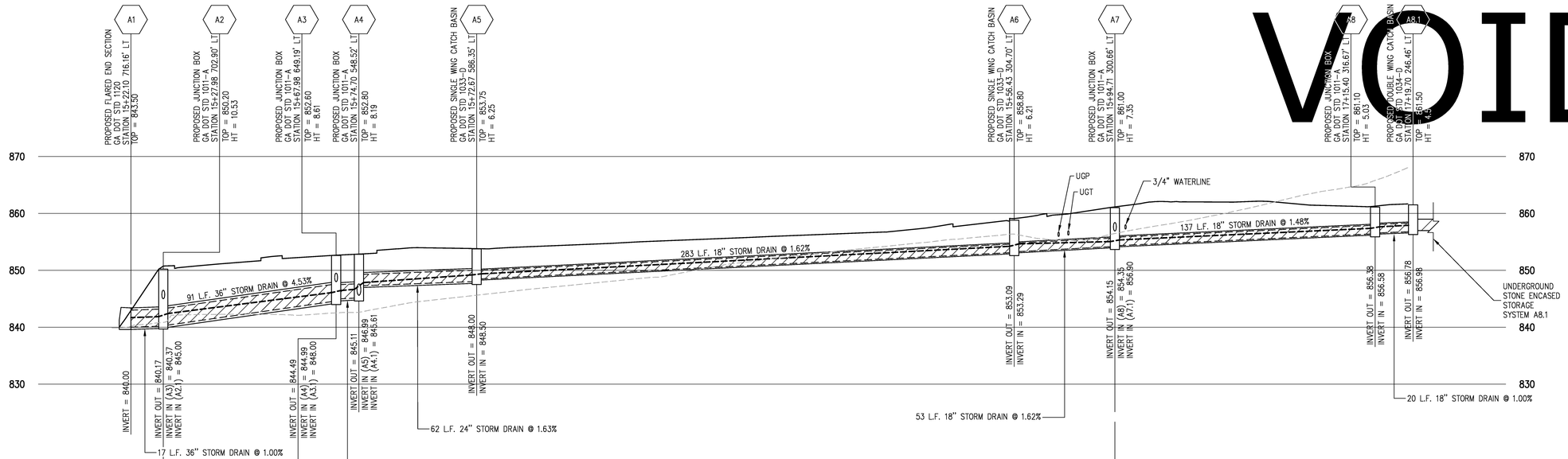

STORM SEWER PROFILE: A1 TO A8.1

SCALE: 1" = 30' HORIZONTAL
SCALE: 1" = 10' VERTICAL

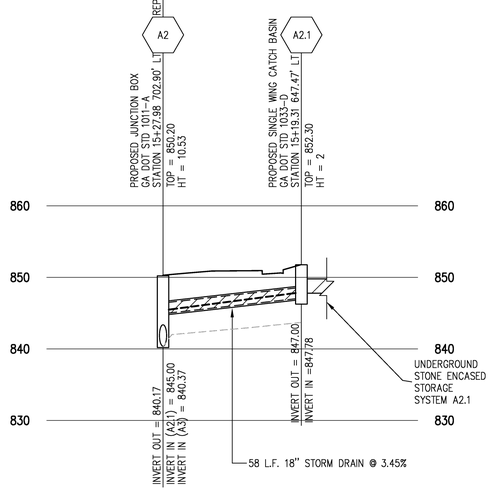

STORM SEWER PROFILE: A2 TO A2.1

SCALE: 1" = 30' HORIZONTAL
SCALE: 1" = 10' VERTICAL

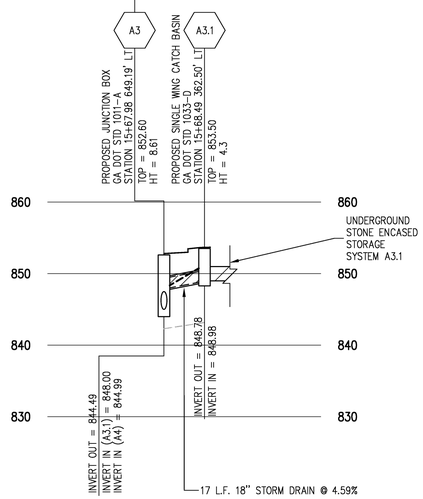

STORM SEWER PROFILE: A3 TO A3.1

SCALE: 1" = 30' HORIZONTAL
SCALE: 1" = 10' VERTICAL

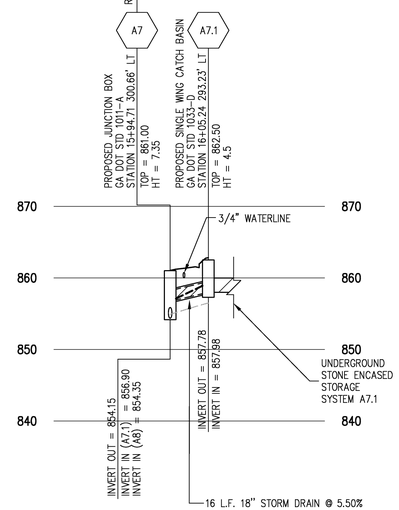

STORM SEWER PROFILE: A7 TO A7.1

SCALE: 1" = 30' HORIZONTAL
SCALE: 1" = 10' VERTICAL

LEGEND:

EXISTING GRADE	- - - - - - - - - - - -
PROPOSED GRADE	————————
25 YEAR HGL	— — — — — — — — — — — —

URS
400 Northpark Town Center
1000 Abernathy Road N.E., Suite 900
Atlanta, Georgia 30328
Tel: (678) 808-8800, Fax: (678) 808-8400

GRAPHIC SCALE
30 0 15 30 60
(IN FEET)
1 inch = 30 ft.

REVISIONS

STATE OF GEORGIA
DEPARTMENT OF TRANSPORTATION
OFFICE OF INNOVATIVE PROGRAM DELIVERY

DRAINAGE PROFILES

NEWNAN SR 34 AND HOLLZ PKWY
PARK AND RIDE LOT

22-01
DRAWING No.