STATE	PROJECT NUMBER	SHEET NO.	TOTAL SHEETS
GA.		305	355

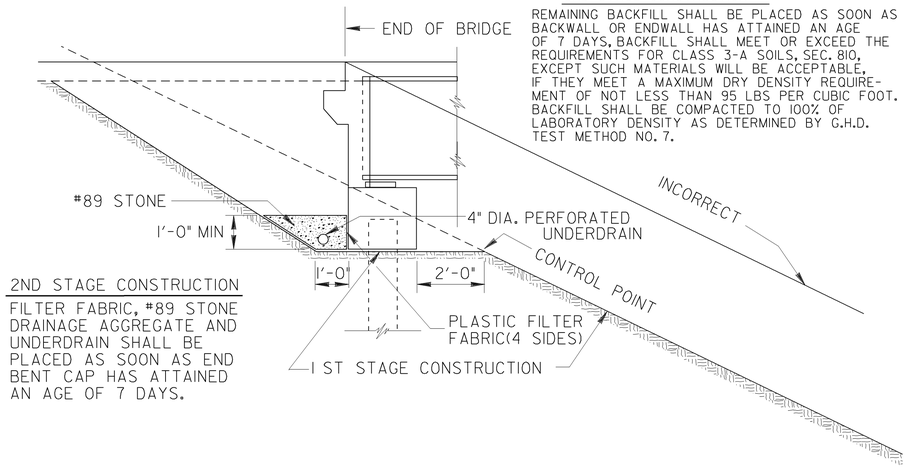

SKETCH SHOWING CONSTRUCTION OF FILLS AT ENDS OF BRIDGES

NO SCALE

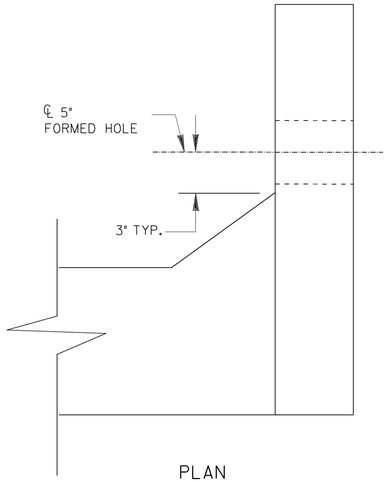

PLAN

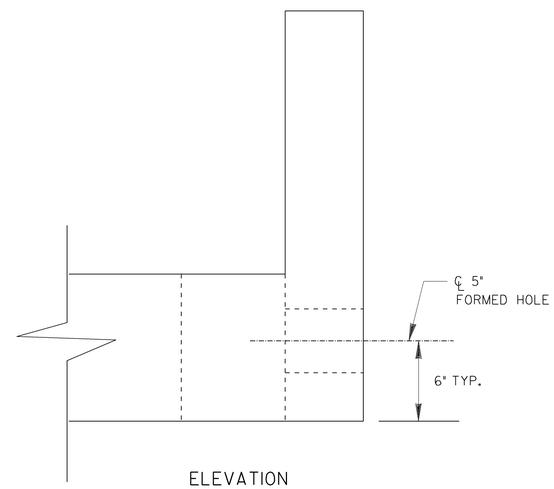

ELEVATION

WINGWALL DETAIL

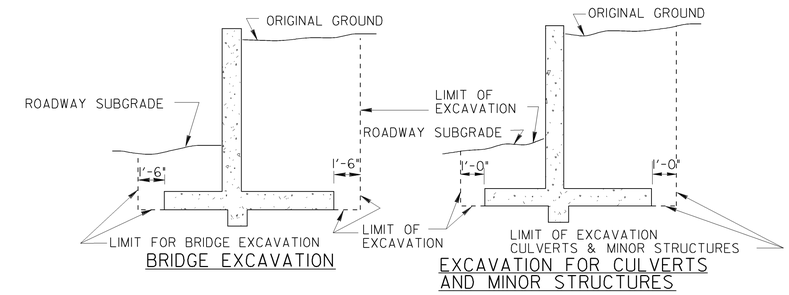

BRIDGE EXCAVATION

EXCAVATION FOR CULVERTS AND MINOR STRUCTURES

TYPICAL DETAILS OF EXCAVATION AT STRUCTURES

NOTE: WHERE FILL IS PLACED BEFORE CONSTRUCTION OF STRUCTURES THE COST OF EXCAVATION AND BACKFILL WILL BE INCLUDED IN THE COST OF OTHER ITEMS. THERE WILL BE NO PAYMENT FOR EXCAVATION UNDER THIS CONDITION.

NOTES:

1. PERFORATED UNDERDRAIN SHALL EXTEND TO THE INSIDE FACE OF WING AT THE HIGH END OF THE CAP.
2. AT THE LOW END OF THE CAP, CONNECT PERFORATED UNDERDRAIN TO A COMPATIBLE SOLID PIPE FROM THE INSIDE FACE OF WING UNTIL IT EXITS THE SLOPE. SOLID PIPE SHALL HAVE A MINIMUM SLOPE OF 2%.
3. SOLID PIPE MAY BE PLACED AT EITHER END OF CAPS WITH LEVEL BOTTOM.
4. PERFORATED UNDERDRAIN SHALL BE INSTALLED PARALLEL TO BOTTOM OF CAP. LOW POINTS OR SAGS THAT MAY TRAP WATER WILL NOT BE ALLOWED.
5. FILTER FABRIC SHALL NOT BE ATTACHED TO THE END BENT CAP.
6. COST FOR PROVIDING AND INSTALLING FILTER FABRIC, UNDERDRAIN, AND STONE SHALL BE INCLUDED IN THE PRICE BID FOR CONTRACT ITEMS.

SHADED AREA IS BRIDGE EXCAVATION.

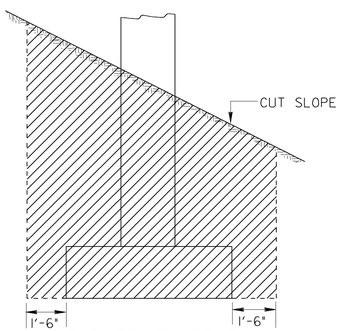

INTERMEDIATE BENT

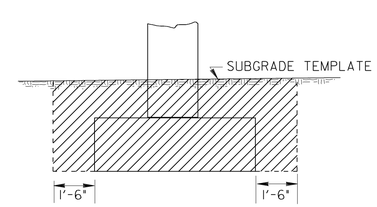

INTERMEDIATE BENT

TYPICAL EXCAVATION DETAILS AT BRIDGE BENTS IN CUT SECTIONS

NO SCALE

DATE	DEPARTMENT OF TRANSPORTATION STATE OF GEORGIA	
REVISION	STANDARD TYPICAL FILL DETAIL AT END OF BRIDGE	
	NO SCALE	REDRAWN SEPT., 1999
BY	DES. ___ DRW. ___ TRA. ___ CHK. ___ (SUBMITTED) James A. Kennel STATE ROAD & AIRPORT DESIGN ENGR. (APPROVED) Frank L. Pandit CHIEF ENGINEER	NUMBER 9037