STATE	PROJECT NUMBER	SHEET NO.	TOTAL SHEETS
GA.		232	355

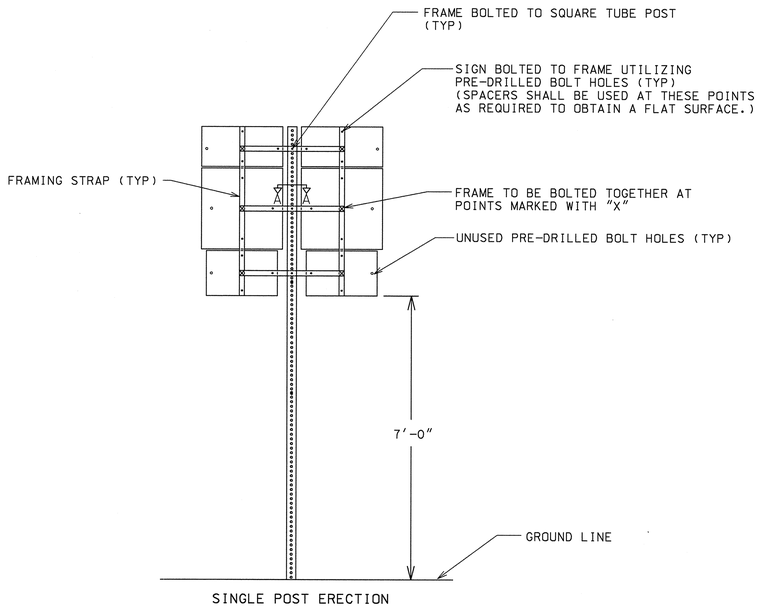

SINGLE POST ERECTION

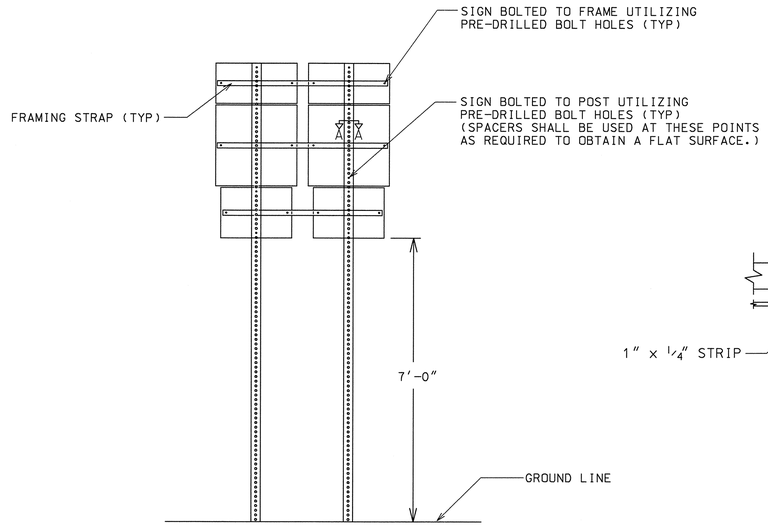

DUAL POST ERECTION

TYPICAL ASSEMBLY UNIT (BACK VIEW)

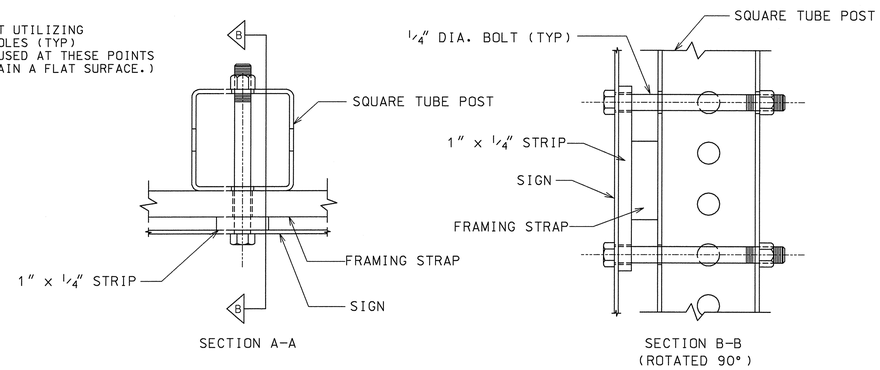

OPTION #1 - FRAMING STRAP WITHOUT MOUNTING HOLE

(ALL FRAMING STRAPS SHALL BE 1 1/2" x 1/2" x REQUIRED LENGTH)

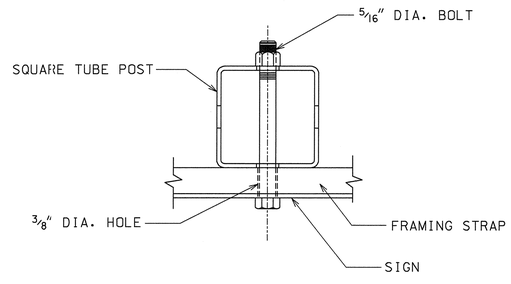

OPTION #2 - FRAMING STRAP WITH MOUNTING HOLE

(ALL FRAMING STRAPS SHALL BE 2" x 1/2" x REQUIRED LENGTH)

GENERAL NOTES:

1. STYLE OF FRAMING IS OPTIONAL. ALTERNATE DESIGNS ARE ACCEPTABLE UPON APPROVAL OF THE ENGINEER. FRAME SHALL BE DESIGNED SO AS TO HOLD THE ASSEMBLY IN A FIXED, RIGID POSITION.
2. FRAMING STRAPS SHALL BE GALVANIZED STEEL OR ALUMINUM.
3. STEEL SHALL BE A.S.T.M. DESIGNATION A-283, GRADE D, GALVANIZED IN ACCORDANCE WITH A.S.T.M. DESIGNATION A-123.
4. ALUMINUM SHALL BE ALLOY 6061-T6.
5. BOLTS, NUTS, WASHERS, AND SPACERS SHALL CONFORM TO THE STANDARD SPECIFICATIONS AND/OR SPECIAL PROVISIONS.
6. FRAMING STRAPS ON A DUAL POST ERECTION SHALL NOT BE BOLTED TO THE POST.

DATE	REVISIONS
3/31/00	CHANGED U-CHANNEL POST TO SQUARE TUBE POST

GEORGIA DEPARTMENT OF TRANSPORTATION
OFFICE OF TRAFFIC OPERATIONS

DETAILS FOR TYPICAL FRAMING

NO SCALE JANUARY 2000

PCBDTB

T-2