STATE	PROJECT NUMBER	SHEET No.	TOTAL SHEETS
GA.	CSSTP-0007-00(694)	202	355

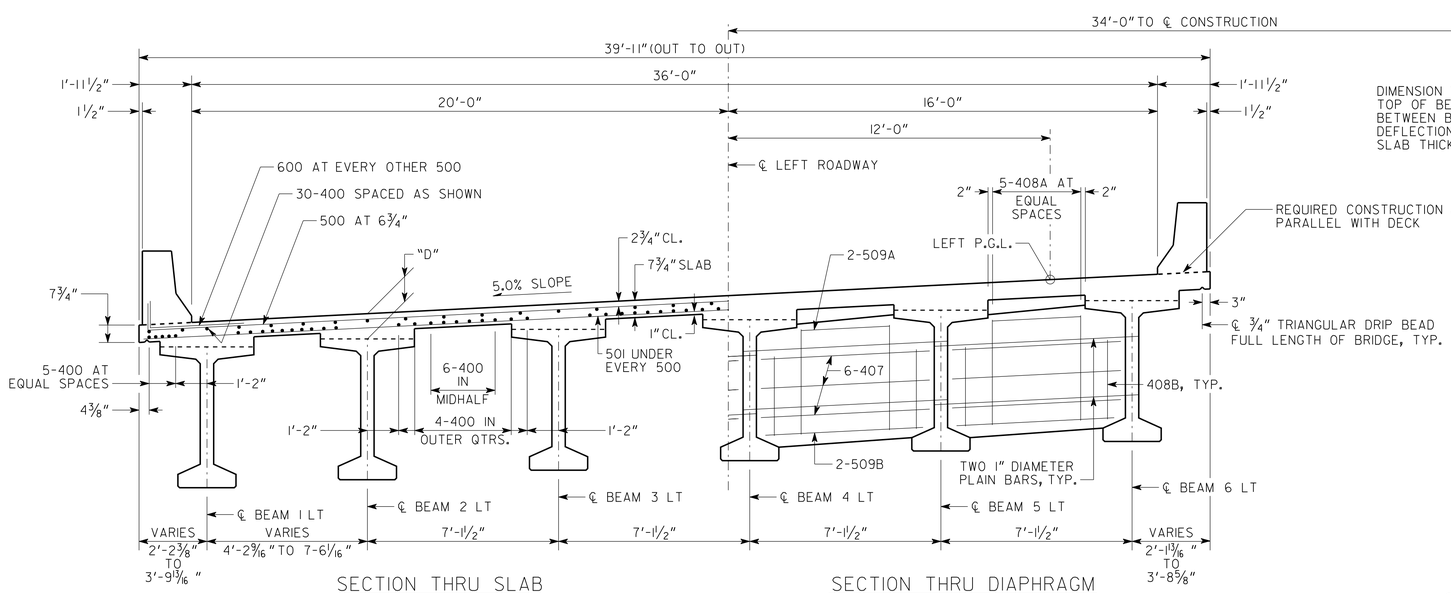

SECTION THRU SLAB

SECTION THRU DIAPHRAGM

DIMENSION "D" IS MEASURED FROM TOP OF SLAB TO TOP OF BEAMS AT CENTERLINE BEARING. VARY "D" BETWEEN BEARINGS TO COMPENSATE FOR DEAD LOAD DEFLECTION AND VERTICAL CURVE. MAINTAIN A CONSTANT SLAB THICKNESS OF 7¾"
"D" = 1¹¹⁄₁₆"

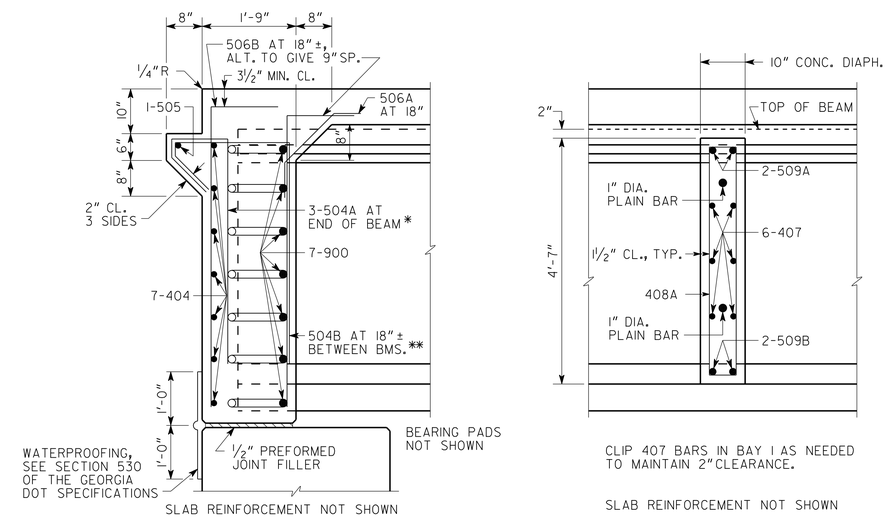

SECTION AT ENDWALL

SECTION THRU DIAPHRAGM

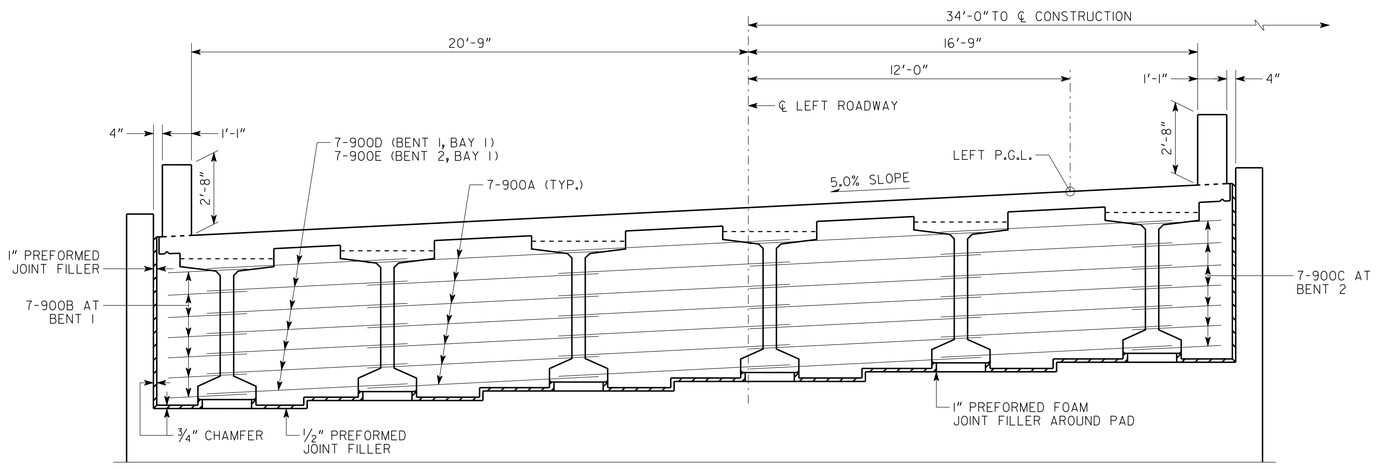

BARS 404, 504, 505, AND 506 NOT SHOWN.

SECTION THRU ENDWALL

* PLACE ADDITIONAL 504A BARS AT ACUTE ENDS OF PAVING REST TO MAINTAIN 18"± MAXIMUM SPACING.

** PLACE NUMBER OF 504B BARS AS FOLLOWS:

BENT 1 LEFT

BAYS 1 THROUGH 5 = 5 BARS

BENT 2 LEFT

BAY 1 = 2 BARS
BAYS 2 THROUGH 5 = 5 BARS

NOTES

1. MAINTAIN 2" CL. ON ALL REINFORCEMENT UNLESS OTHERWISE NOTED.
2. 400 BARS IN OVERHANGS AND IN MIDHALF OF FIRST BAY SHALL BE PLACED AS ARC LINES WITH VARYING SPACING TO PROVIDE EQUAL SPACES ALONG SPAN (2" MIN. SPACES). REMAINING 400 BARS SHALL BE PLACED PARALLEL TO CENTERLINE OF BEAMS.
3. 500 AND 501 BARS SHALL BE PLACED PERPENDICULAR TO BEAMS 2 THROUGH 6 LEFT.
4. LAP 404 BARS A MINIMUM OF 1'-9".
5. LAP 505 BARS A MINIMUM OF 2'-2".

BRIDGE NO. 1 LT

Drawing Copyright © 2013

CHA
270 Peachtree St. NW, Suite 1500 · Atlanta, GA 30303-1283
Main: (678) 954-6000 · www.chacompanies.com

GEORGIA
DEPARTMENT OF TRANSPORTATION
ENGINEERING DIVISION-OFFICE OF BRIDGES AND STRUCTURES

DECK SECTIONS - SPAN 1 LEFT
SE NEWNAN BYPASS OVER CENTRAL OF GEORGIA RAILROAD COMPANY
COWETA COUNTY CSSTP-0007-00(694)

DATE	REVISIONS	BY

DRAWING NO. 35-005
BRIDGE SHEET 5 OF 16

⅜" = 1'-0" (UNLESS NOTED) JANUARY 2014

DESIGNED SAW | CHECKED KJK | REVIEWED DLC/WMD
DRAWN SAW | DESIGN GROUP EJC | APPROVED BFR

1 INCH WHEN PRINTED FULL SIZE

I:\15795\MSTN\P1 0007694\BRIDGE\FINAL\34BYPASS_05-DS.dgn
9:33:30 AM
1/3/2014