STATE	PROJECT NUMBER	SHEET NO.	TOTAL SHEETS
GA.	CSSTP-0007-00 (693)	80	122

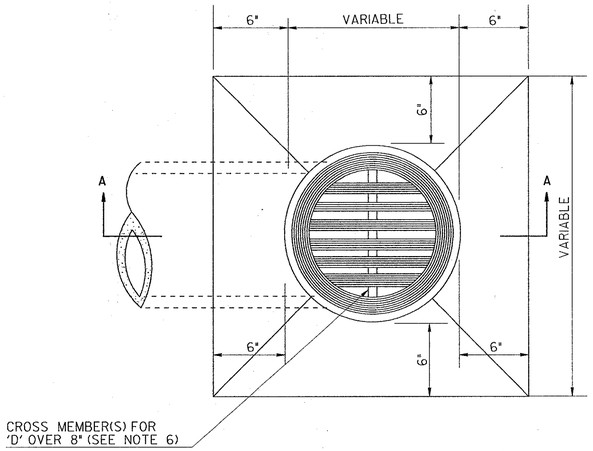

PLAN

"D" = INSIDE DIAMETER OF PIPE; 6" TO 12" TYPICAL, 24" MAX.

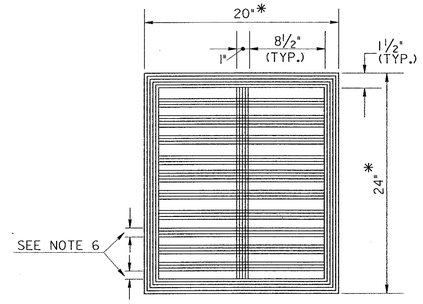

GRATE DETAIL

* THE ENGINEER MAY APPROVE REDUCED GRATE & BOX DIMENSIONS FOR THE SMALLER DRAIN PIPES.

GENERAL NOTES:

1. SPECIFICATIONS: GEORGIA STANDARD, CURRENT EDITION, & SUPPLEMENTS THERETO.
2. CONCRETE COLLARS AND CONCRETE TOP MAY BE EITHER BUILT-IN PLACE CLASS 'B' CONCRETE OR PRECAST CLASS 'A' CONCRETE.
3. PIPES FROM DRAIN INLET SHALL BE OF THE STRENGTH, SIZE, AND MATERIAL APPROVED BY THE ENGINEER; WHERE ELBOWS ARE USED, THE BEND SHALL BE AS SPECIFIED. CONCRETE PIPE MAY BE CLASS II OR CLASS III, UNLESS OTHERWISE SPECIFIED. CORRUGATED PIPE OR OTHER ALTERNATIVES MAY BE APPROVED BY THE ENGINEER.
4. MINIMUM THICKNESS OF CAST IRON GRATES SHALL BE AS FOLLOWS:
   a) 0.5"THK. FOR PIPE ELBOWS 12" OR LESS;
   b) 1.0"THK. FOR PIPE ELBOWS OF 15";
   c) 1.5"THK. FOR 18" OR 24" PIPE ELBOW;
   -OR-BOX TYPE ALTERNATE.
5. PAYMENT FOR DRAIN INLET PER EACH INCLUDES GRATE, CONCRETE COLLAR OR TOP, AND ELBOW OR BOX ALTERNATE. THE PIPE FROM THE ELBOW OR BOX TO MAINLINE CONNECTION SHALL BE PAID FOR AS LIN. FT. OF SIDE DRAIN PIPE, HOWEVER, THE PIPE MATERIAL MAY VARY FROM OTHER SIDE DRAIN ON PROJECT AS APPROVED BY THE ENGINEER. COSTS FOR ALL CONNECTIONS SHALL BE INCLUDED IN THE PAYMENT FOR THE PIPE.
6. GRATE DESIGNS SHOWN ARE TYPICAL. MAXIMUM SLOT OPENINGS SHALL BE 8 1/2 " LONG; 1" WIDE. APPROXIMATELY 50% OF GRATE AREA SHALL BE OPENINGS.

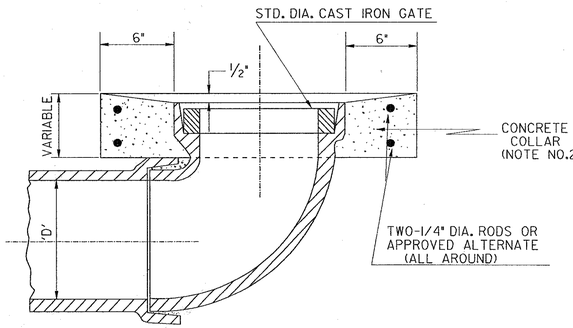

SECTION A-A

(STANDARD ELBOW TYPE)

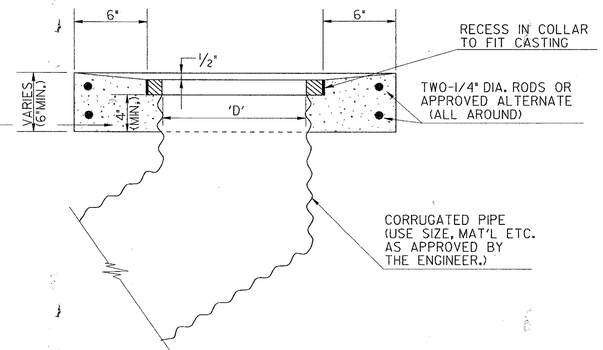

ALTERNATE SECTION A-A

(WHERE APPROVED)

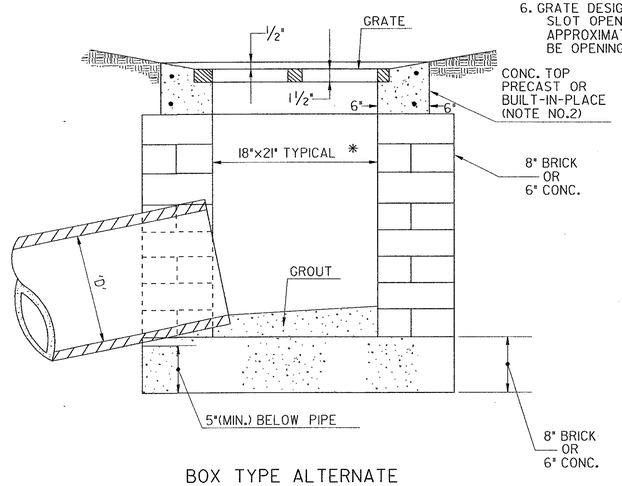

BOX TYPE ALTERNATE

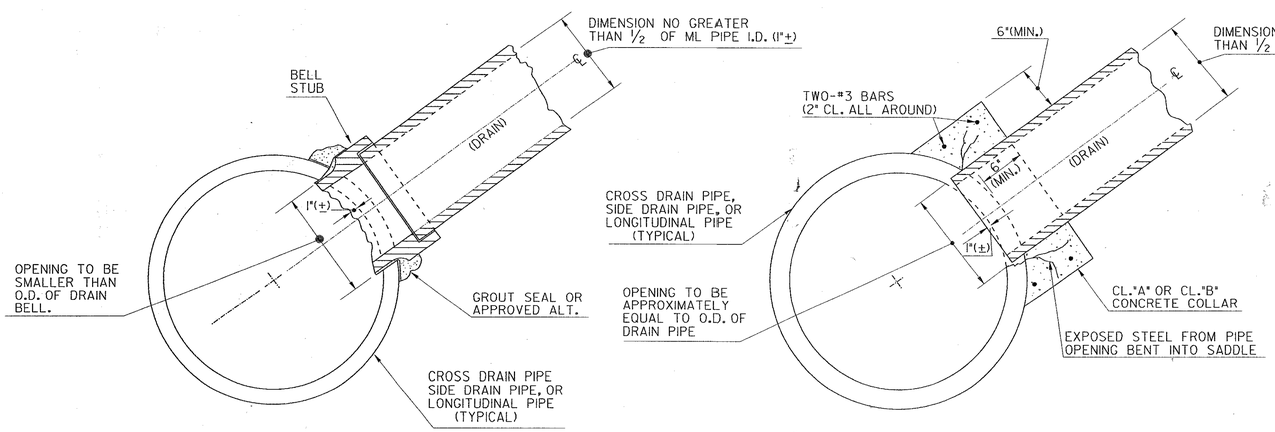

SECTIONAL VIEWS SHOWING TYPICAL ALTERNATE DRAIN CONNECTIONS

NOTES FOR CONNECTIONS:

AN OPENING IN THE MAINLINE PIPE FOR A CONNECTION SHALL BE NO CLOSER THAN ONE (1) FOOT TO THE NEAREST JOINT IN THE MAINLINE PIPE.

OTHER ATERNATE CONNECTIONS MAY INCLUDE PRE-FABRICATED "WYE" OR "TEE" SECTIONS OR BY A CONNECTION TO ANOTHER DRAINAGE STRUCTURE.

COSTS FOR ALL MATERIALS AND LABOR FOR CONNECTIONS OF ANY KIND ARE INCLUDED WITH PAYMENT FOR THE PIPE OR FOR THE INLET

SPECIAL NOTE:
THE INLETS SHOWN ON THIS STANDARD ARE NOT TO BE USED IN TRAVELWAY.

			DATE	DEPARTMENT OF TRANSPORTATION STATE OF GEORGIA
			REVISION	STANDARD DRAIN INLET (ELBOW TYPE AND ALTERNATES) FOR YARD DRAINS
				NO SCALE — REV. & REDRN.: NOV., 1999
			BY	REV. ____ REDRN. ____ CHK. ____ (SUBMITTED) STATE ROAD & AIRPORT DESIGN ENGR. (APPROVED) CHIEF ENGINEER — NUMBER 1035