STATE	PROJECT NUMBER	SHEET NO.	TOTAL SHEETS
GA.	CSHPP-0007-00(550) CSSTP-M002-00(960)	95	178

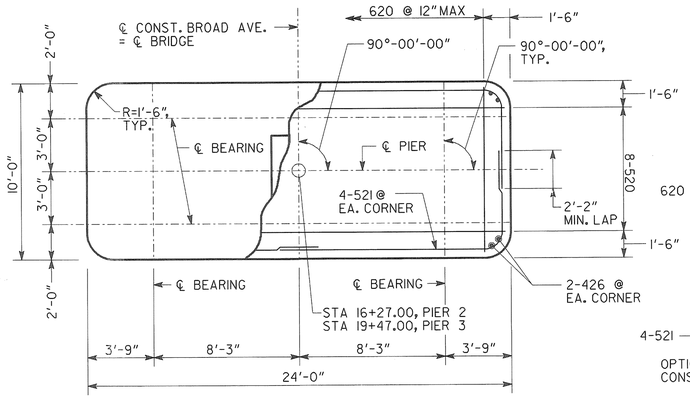

PLAN

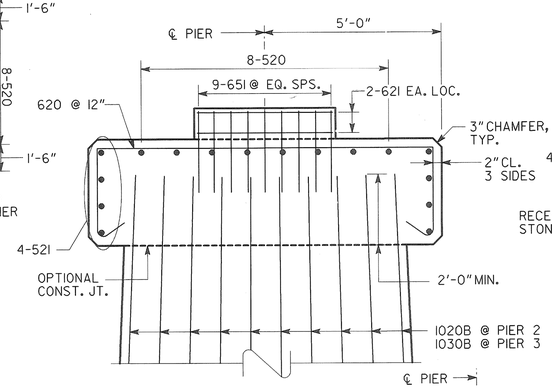

SECTION B-B

NO SCALE

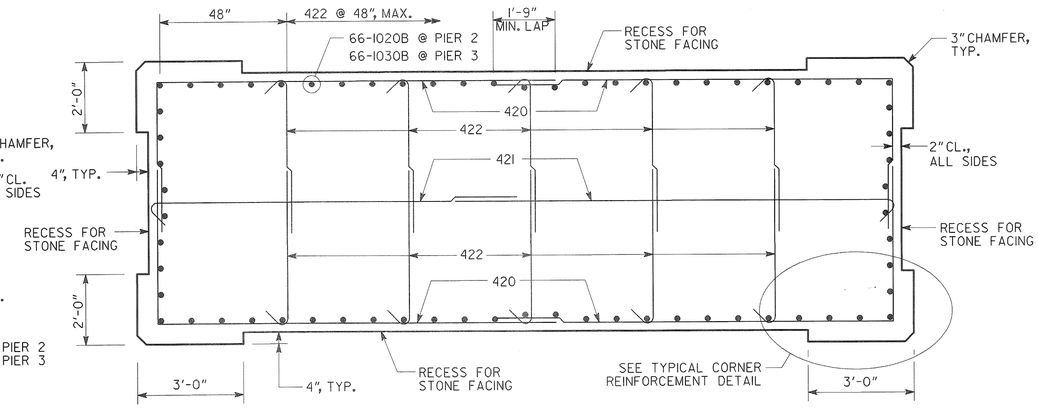

SECTION C-C

NO SCALE

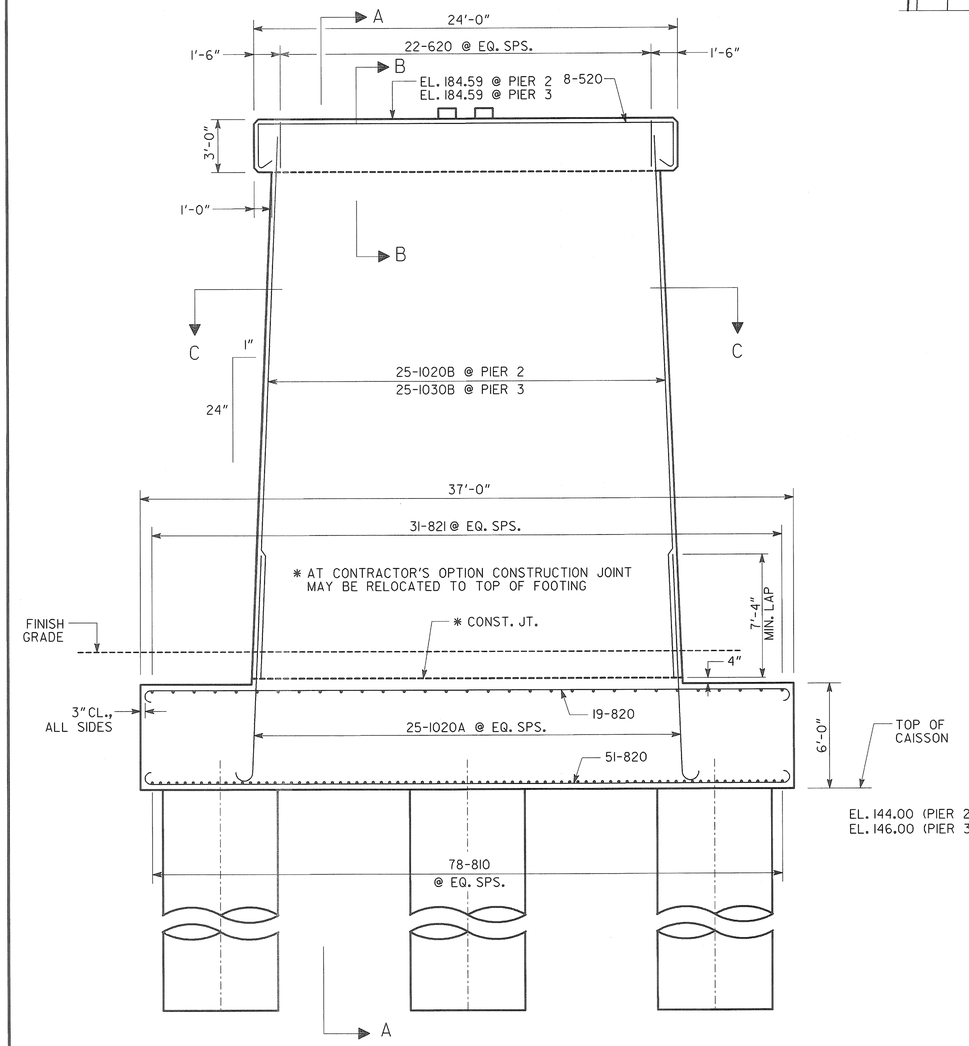

ELEVATION

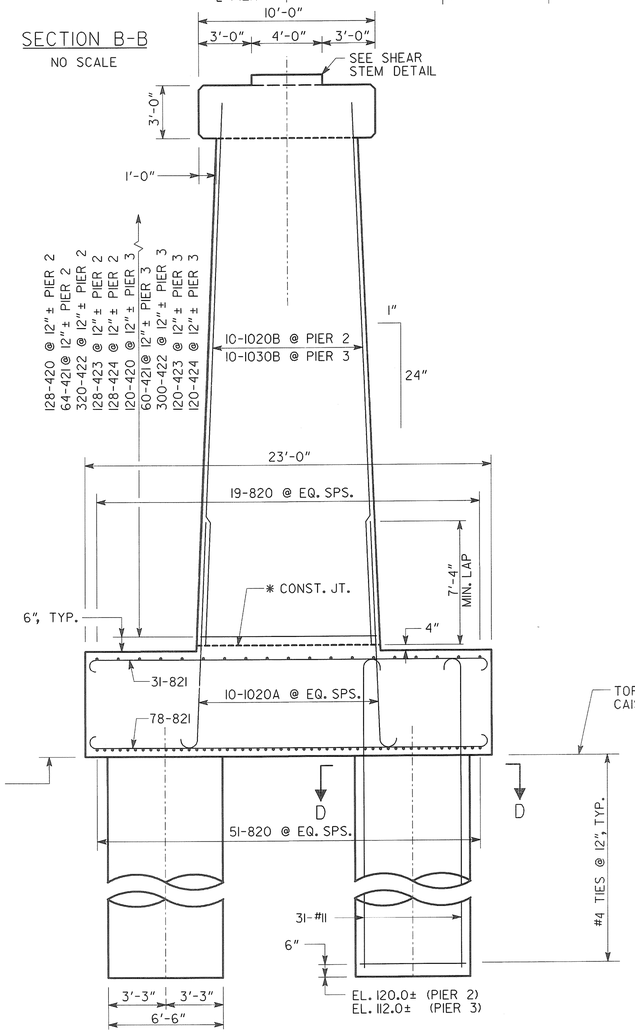

SECTION A-A

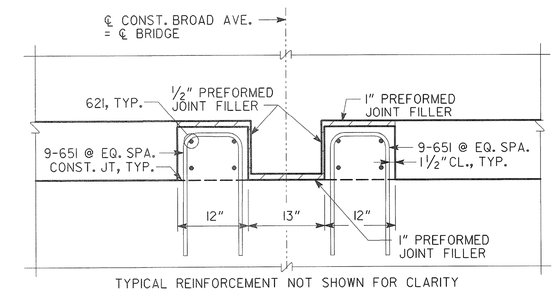

TYPICAL REINFORCEMENT NOT SHOWN FOR CLARITY

SHEAR STEM DETAIL

NO SCALE

SUBSTRUCTURE QUANTITIES		
ITEM	PIER 2	PIER 3
CY CLASS "AA" CONCRETE	456.0	437.8
LB BAR REINF STEEL	34121	33238
SF STONE FACING	1142	996

NOTES:
1. MAINTAIN 2" CL. ON ALL REINFORCEMENT UNLESS OTHERWISE NOTED.
2. SLOPE TOP OF PIER TO DRAIN AWAY FROM BEARINGS.
3. DRILLED CAISSONS ARE DESIGNED FOR AN ALLOWABLE SERVICE BEARING CAPACITY OF 60 KSF WITH 1.25 KSF SKIN FRICTION AND ALLOWABLE STRENGTH BEARING CAPACITY OF 96 KSF WITH 2.00 KSF SKIN FRICTION.
4. SOCKET DRILLED SHAFTS A MINIMUM OF 20 FEET INTO SOUND ROCK. SKIN FRICTION ONLY APPLIES TO THE PORTION OF CAISSON SOCKETED INTO ROCK.

BRIDGE NO. 1

Heath & Lineback Engineers
INCORPORATED
2390 CANTON ROAD, BUILDING 200
MARIETTA, GEORGIA 30066-5393
(770)424-1668

STATE OF GEORGIA

DEPARTMENT OF TRANSPORTATION

ENGINEERING DIVISION - OFFICE OF BRIDGE AND STRUCTURES

PIERS 2 & 3 DETAILS (1 OF 2)

CR 1297 (BROAD AVE.) OVER FLINT RIVER

DOUGHERTY COUNTY

CSHPP-0007-00(550)
CSSTP-M002-00(960)

SCALE: 1/4" = 1'-0"

NOVEMBER 2011

DRAWING NO.	REVISIONS	BY	DATE
35 - 043			
BRIDGE SHEET 43 OF 53			

DESIGNED BCB	CHECKED RLF	REVIEWED WEI/WMD	
DRAWN BCB	DESIGN GROUP	APPROVED BFR	

1 INCH WHEN PRINTED FULL SIZE

J:/2009039/0007550/STRUCTURES\BRIDGE\PLANS\0007550_PIERS 2 & 3_01.DGN