STATE	PROJECT NUMBER	SHEET NO.	TOTAL SHEETS
GA.	CSHPP-0007-00(550) CSSTP-M002-00(960)	94	178

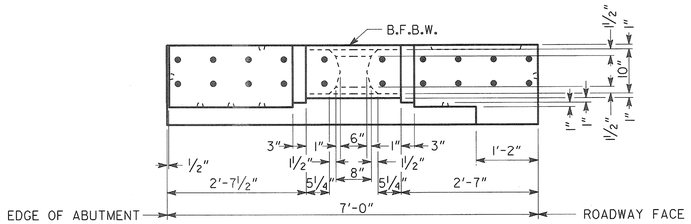

PARAPET PLAN

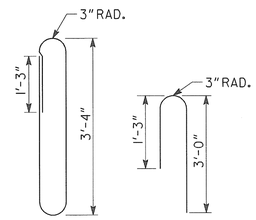

598 597

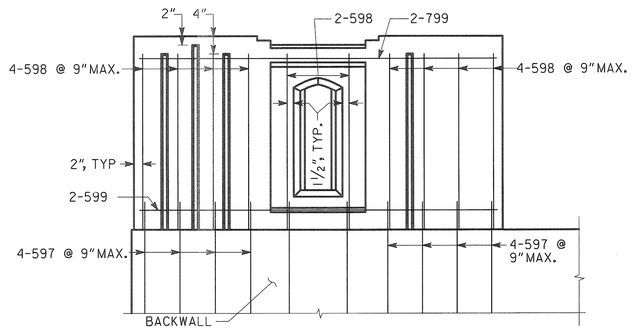

PARAPET ELEVATION

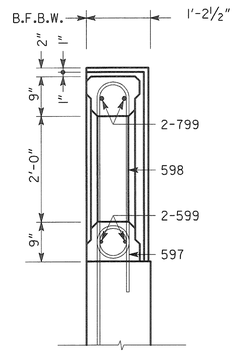

PARAPET SECTION

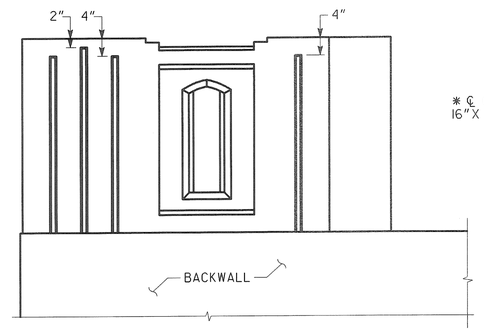

VIEW A-A

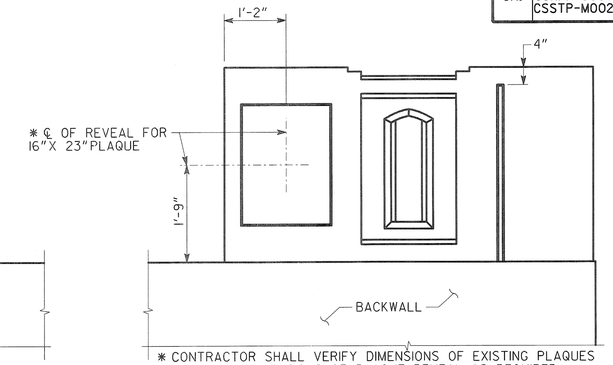

✱ CONTRACTOR SHALL VERIFY DIMENSIONS OF EXISTING PLAQUES AND ADJUST DIMENSIONS OF PLAQUE REVEAL AS REQUIRED.

VIEW B-B

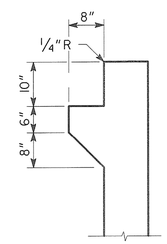

PAVING REST DETAL

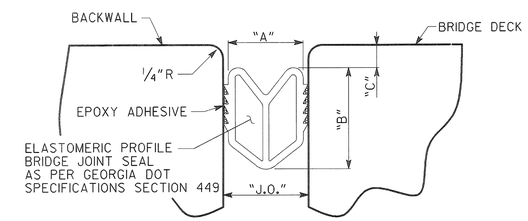

LONGITUDINAL SECTION

DIMENSION TABLE FOR JOINTS					
	J.O. MAX	J.O. MIN	"A"	"B"	"C"
ABUTMENT 1	6"	2"	4"	5⅛"	½"
ABUTMENT 5	6"	2"	4"	5⅛"	½"

TEMPERATURE TABLE FOR JOINT WIDTHS					
	TEMP (°F)	65	75	85	95
ABUTMENT 1	"A" (IN)	2¾"	2½"	2¼"	2"
ABUTMENT 5	"A" (IN)	2¾"	2½"	2¼"	2"

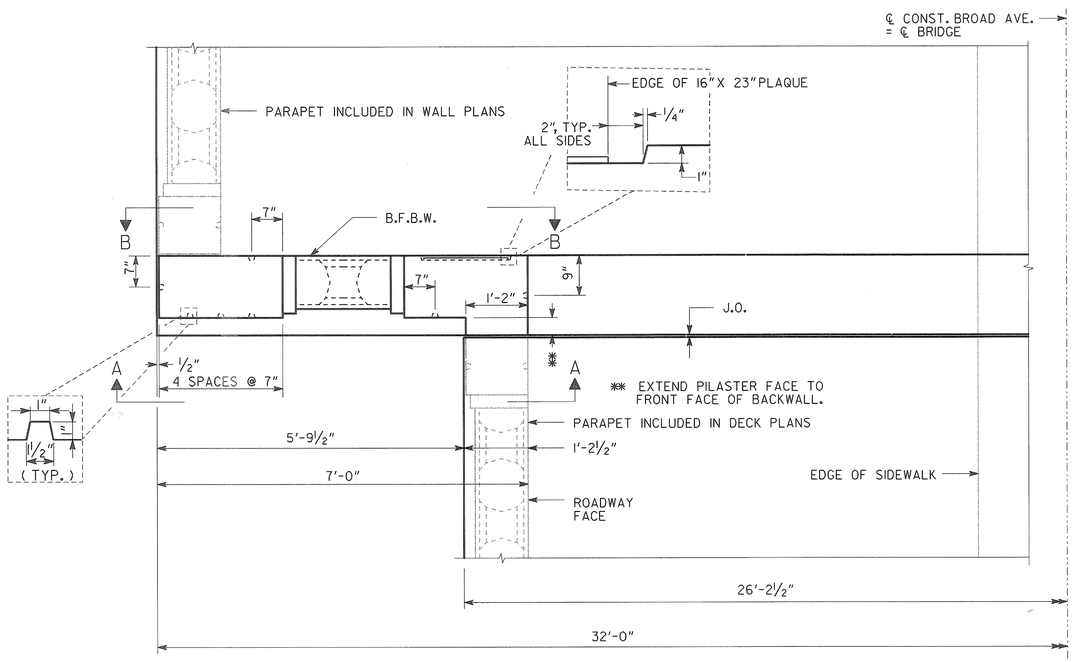

PARAPET LAYOUT

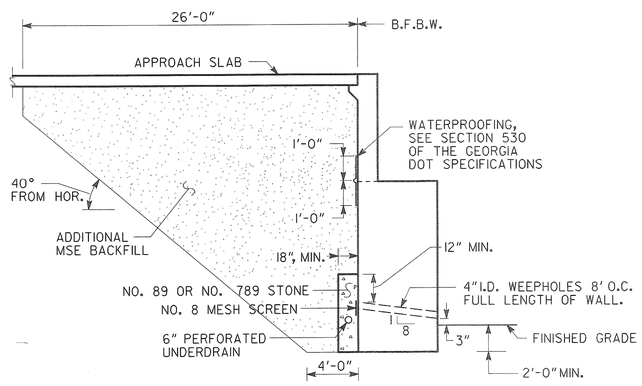

BACKFILL & DRAINAGE DETAILS

BRIDGE NO. 1

Heath & Lineback Engineers
INCORPORATED
2390 CANTON ROAD, BUILDING 200
MARIETTA, GEORGIA 30066-5393
(770)424-1668

STATE OF GEORGIA
DEPARTMENT OF TRANSPORTATION
ENGINEERING DIVISION - OFFICE OF BRIDGE AND STRUCTURES

ABUTMENT 1 & 5 DETAILS (2 OF 2)
CR 1297 (BROAD AVE.) OVER FLINT RIVER
DOUGHERTY COUNTY
CSHPP-0007-00(550)
CSSTP-M002-00(960)

NO SCALE — NOVEMBER 2011

DESIGNED	JRL/JMO	CHECKED	RLF	REVIEWED	WEI/WMD
DRAWN	JRL	DESIGN GROUP		APPROVED	BFR

DATE	REVISIONS	BY

DRAWING NO. 35 - 042

BRIDGE SHEET 42 OF 53

1 INCH WHEN PRINTED FULL SIZE

J:/2009039/0007550/STRUCTURES\BRIDGE\PLANS\0007550_ABUTMENT 1 & 5_02.DGN