STATE	PROJECT NUMBER	SHEET NO.	TOTAL SHEETS
GA.	CSHPP-0007-00(550) CSSTP-M002-00(960)	93	178

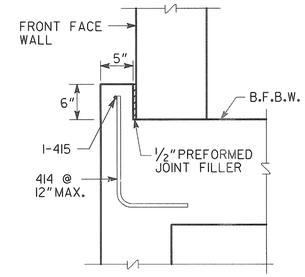

DETAIL A
NO SCALE

NOTE:
ADDITIONAL 6" OF CONCRETE SHALL COVER MSE WALL FROM 1" ABOVE LEVELING PAD TO 1" BELOW MSE WALL COPING.

NOTE:
ELEVATIONS SHOWN FOR THE TOP OF THE CAP ARE BASED ON AN ASSUMED DISC BEARING HEIGHT OF 5.0" AT ABUTMENT 1 AND 6.0" AT ABUTMENT 5. THESE ELEVATIONS SHALL BE ADJUSTED BY THE CONTRACTOR TO ACCOUNT FOR THE ACTUAL HEIGHT OF THE DISC BEARING TO BE USED. BENT CAP CONCRETE SHALL NOT BE POURED UNTIL THE DISC BEARING SHOP DRAWINGS HAVE BEEN APPROVED AND NECESSARY ADJUSTMENTS HAVE BEEN MADE.

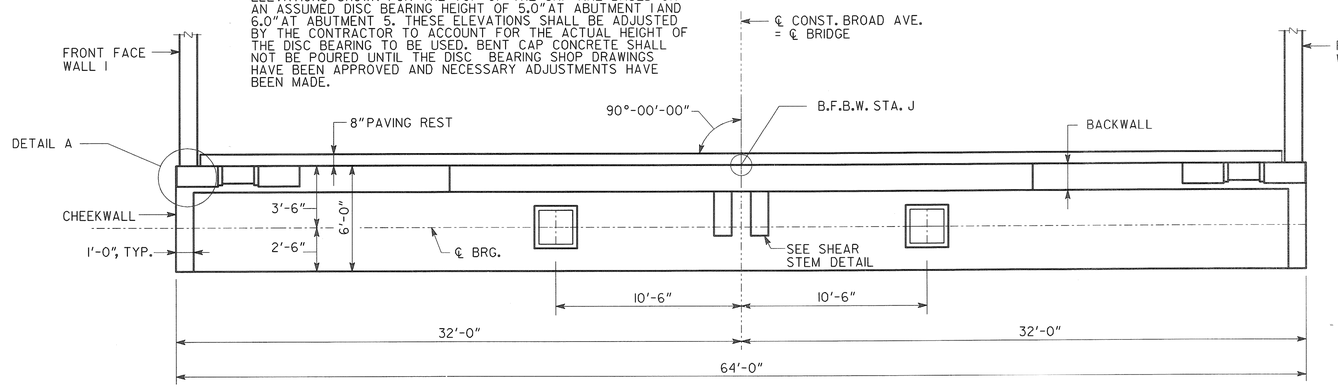

PLAN
ABUTMENT 1 SHOWN
ABUTMENT 5 SIMILAR

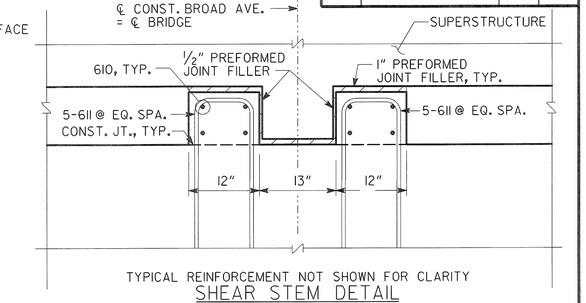

TYPICAL REINFORCEMENT NOT SHOWN FOR CLARITY
SHEAR STEM DETAIL
NO SCALE

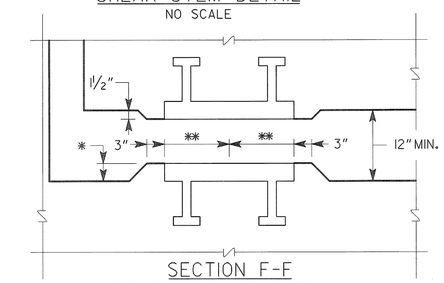

SECTION F-F
BEARING PLINTH DETAIL

PLINTH IS TO BE CAST MONOLITHICALLY WITH CAP.
NO SCALE

* 4" ASSUMED AT ABUT. 1
3" ASSUMED AT ABUT. 5
1 1/2" MIN. REQUIRED
LOWER CASSION CAP ELEVATION IF REQUIRED TO FIT BEARING AND MAINTAIN 1 1/2" MIN. CLEAR.

** 11 1/2" ASSUMED AT ABUTMENT 1
13 1/2" ASSUMED AT ABUTMENT 5

NOTE:
WIDTH OF BACKWALL SHALL BE 1'-4" MINIMUM. CONSTRUCT BACKWALL SO AS TO ENSURE THE NOMINAL GAP BETWEEN THE TOP-FRONT OF THE BACKWALL AND TOP OF THE SUPERSTRUCTURE END FACE IS SET IN ACCORDANCE WITH THE JOINT SETTING TABLE AT THE APPROPRIATE TEMPERATURE. THE WIDTH OF THE BACKWALL MAY BE ADJUSTED ACCORDINGLY. CONTRACTOR IS ADVISED THAT DEFLECTIONS AT THE TOP OF BACKWALL DUE TO PLACEMENT OF FILL MATERIAL MAY BE SIGNIFICANT.

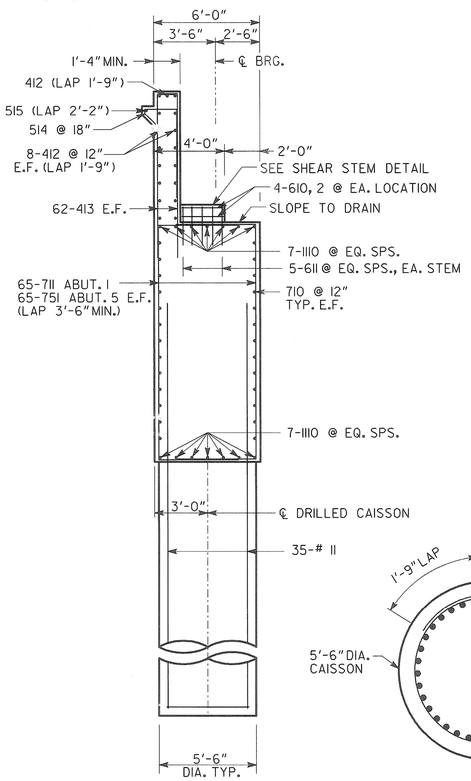

SECTION A-A

SECTION B-B
NO SCALE

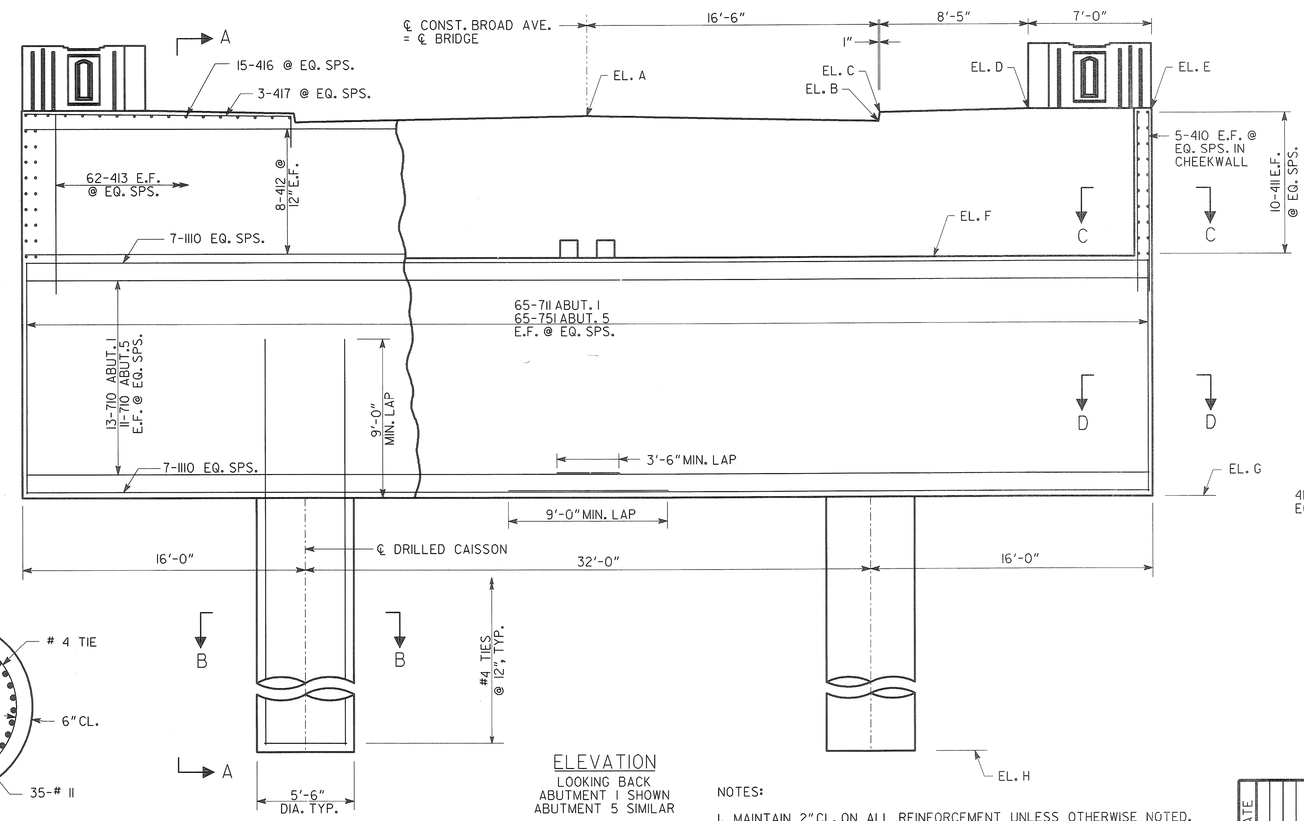

ELEVATION
LOOKING BACK
ABUTMENT 1 SHOWN
ABUTMENT 5 SIMILAR

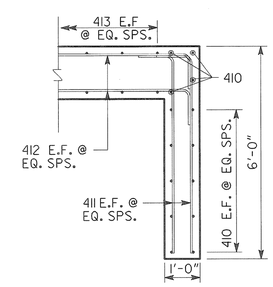

SECTION C-C
NO SCALE

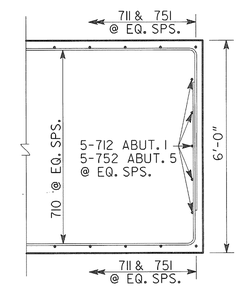

SECTION D-D
NO SCALE

TABLE OF ELEVATIONS									
	A	B	C	D	E	F	G	H	STA. J
ABUTMENT 1	197.61	197.28	197.78	197.86	197.93	189.50	176.00	124.00±	14+55.00
ABUTMENT 5	194.73	194.40	194.90	194.98	195.05	186.62	175.00	133.00±	22+39.00

SUBSTRUCTURE QUANTITIES		
ITEM	ABUT 1	ABUT 5
CY CLASS "AA" CONCRETE	222.3	195.5
LB BAR REINF STEEL	18521	17338
LF PARAPET	14	14
CY ADDITIONAL MSE BACKFILL	678	616

NOTES:

1. MAINTAIN 2" CL. ON ALL REINFORCEMENT UNLESS OTHERWISE NOTED.
2. DRILLED CAISSONS ARE DESIGNED FOR AN ALLOWABLE SERVICE BEARING CAPACITY OF 60 KSF WITH 1.25 KSF SKIN FRICTION AND ALLOWABLE STRENGTH BEARING CAPACITY OF 96 KSF WITH 2.00 KSF SKIN FRICTION.
3. SOCKET DRILLED SHAFTS A MINIMUM OF 20 FEET INTO SOUND ROCK. SKIN FRICTION ONLY APPLIES TO THE PORTION OF CAISSON SOCKETED INTO ROCK.
4. SEE MISCELLANEOUS DETAILS SHEETS FOR PLACEMENT OF TRAFFIC CONTROL CONDUIT BLOCKOUT AND LIGHTING CONDUIT IN THE ABUTMENT.

DRAWING NO. 35 - 041

BRIDGE SHEET 41 OF 53

REVISIONS | DATE | BY

BRIDGE NO. 1

Heath & Lineback Engineers INCORPORATED
2390 CANTON ROAD, BUILDING 200
MARIETTA, GEORGIA 30066-5393
(770)424-1668

STATE OF GEORGIA
DEPARTMENT OF TRANSPORTATION
ENGINEERING DIVISION - OFFICE OF BRIDGE AND STRUCTURES

ABUTMENT 1 & 5 DETAILS (1 OF 2)

CR 1297 (BROAD AVE.) OVER FLINT RIVER

DOUGHERTY COUNTY

CSHPP-0007-00(550)
CSSTP-M002-00(960)

SCALE: 1/4" = 1'-0"

NOVEMBER 2011

DESIGNED JRL/JMO | CHECKED RLF | REVIEWED WEI/WMD
DRAWN JRL | DESIGN GROUP | APPROVED BFR

1 INCH WHEN PRINTED FULL SIZE

J:\2009039\0007550\STRUCTURES\BRIDGE\PLANS\0007550_ABUTMENT 1 & 5_01.DGN