STATE	PROJECT NUMBER	SHEET NO.	TOTAL SHEETS
GA.	CSHPP-0007-00(550) CSSTP-M002-00(960)	79	178

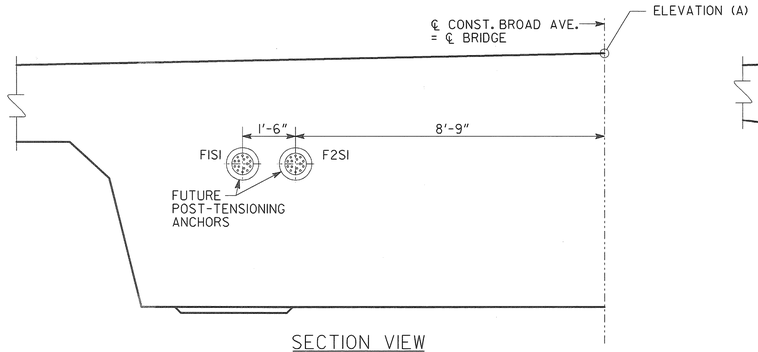

SECTION VIEW

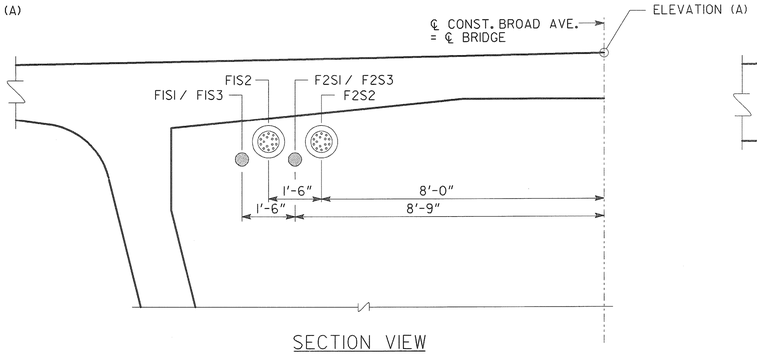

SECTION VIEW

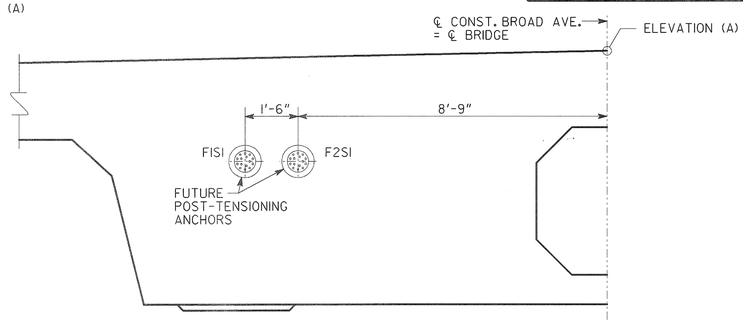

SECTION VIEW

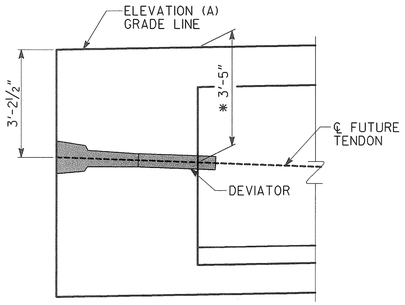

ELEVATION VIEW
FUTURE POST-TENSIONING ANCHORS
AT ABUTMENT 1 DIAPHRAGM

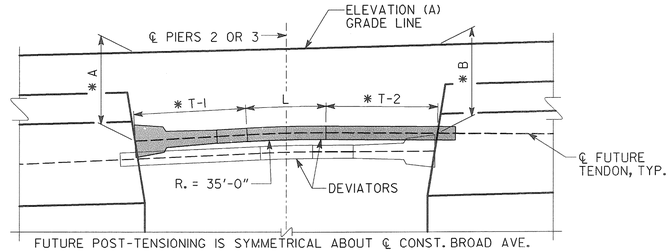

FUTURE POST-TENSIONING IS SYMMETRICAL ABOUT ℄ CONST. BROAD AVE.

TENDON	A	B	L	T-1 ⊛	T-2 ⊛⊛
FIS1 & F2S1 / FIS3 & F2S3	3'-2"	3'-2"	1'-5¾"	3'-5⅝"	3'-5⅝"
FIS2 & F2S2	2'-8"	2'-8"	2'-2¾"	3'-2"	3'-2"

⊛ INCLUDES LENGTH OF ANCHORAGE.
⊛⊛ MINIMUM LENGTH REQUIRED.

ELEVATION VIEW
FUTURE POST-TENSIONING ANCHORS
AT PIER 2 & 3 TABLE

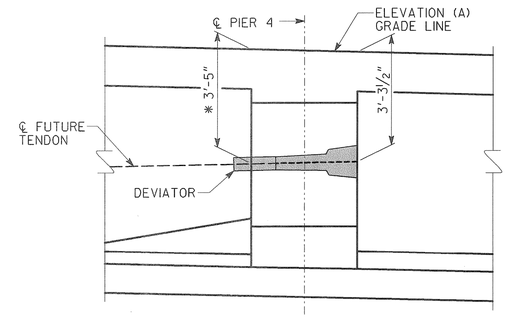

ELEVATION VIEW
FUTURE POST-TENSIONING ANCHORS
AT PIER 4 DIAPHRAGM

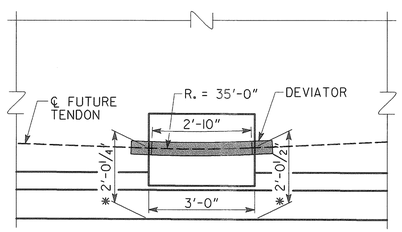

SECTION A-A - DIMENSIONS

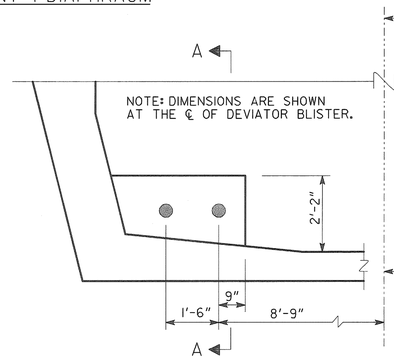

SPAN 2
FUTURE POST-TENSIONING

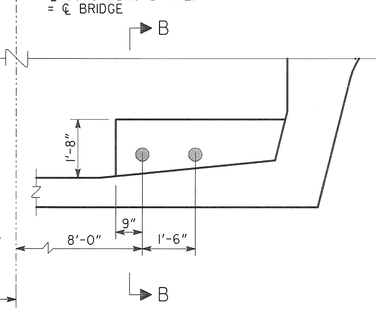

SPANS 1 & 3
FUTURE POST-TENSIONING

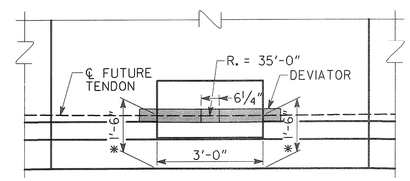

SECTION B-B - DIMENSIONS

NOTE:

1. FUTURE POST-TENSIONING GEOMETRY VARIES IN THE VERTICAL PLANE ONLY.
2. * DIMENSIONS SHOWN ARE AT FACE OF CONCRETE.
3. DEVIATORS SHALL EXTEND BEYOND FACE OF CONCRETE BY 6" MINIMUM.
4. TYPICAL SEGMENT REINFORCEMENT SHOWN IN HALFTONE FOR CLARITY.
5. REINFORCEMENT DETAILED HERE IS INCLUDED IN BLISTER REINFORCEMENT QUANTITIES.

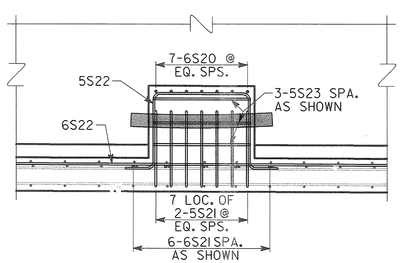

SECTION A-A - REINFORCEMENT

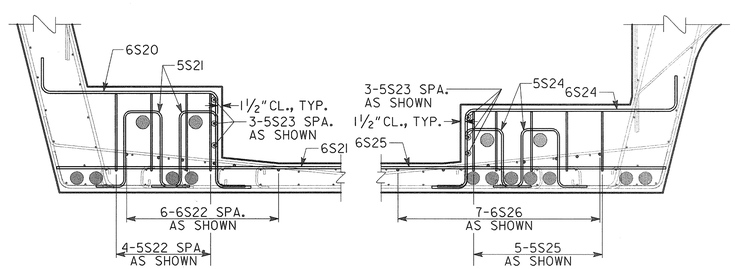

DEVIATOR BLISTER DETAILS

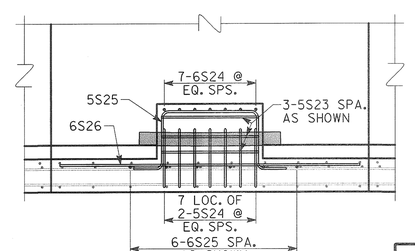

SECTION B-B - REINFORCEMENT

BRIDGE NO. 1

Heath & Lineback Engineers
INCORPORATED
2390 CANTON ROAD, BUILDING 200
MARIETTA, GEORGIA 30066-5393
(770)424-1668

STATE OF GEORGIA
DEPARTMENT OF TRANSPORTATION
ENGINEERING DIVISION - OFFICE OF BRIDGE AND STRUCTURES

FUTURE POST-TENSIONING DETAILS (2 OF 2)
DEVIATOR DETAILS & ANCHORAGE
CR 1297 (BROAD AVE.) OVER FLINT RIVER

DOUGHERTY COUNTY — CSHPP-0007-00(550) CSSTP-M002-00(960)

SCALE: ½" = 1'-0" — NOVEMBER 2011

DRAWING NO. 35 - 027
BRIDGE SHEET 27 OF 53

BY	REVISIONS	DATE

DESIGNED JMO/JAH — CHECKED BKA — REVIEWED WEI/WMD
DRAWN GTP/DB — DESIGN GROUP — APPROVED BFR

1 INCH WHEN PRINTED FULL SIZE

J:\2009039\0007550\STRUCTURES\BRIDGE\PLANS\0007550_FUTURE P-T DETAILS_02.DGN