STATE	PROJECT NUMBER	SHEET NO.	TOTAL SHEETS
GA.	CSHPP-0007-00(550) CSSTP-M002-00(960)	77	178

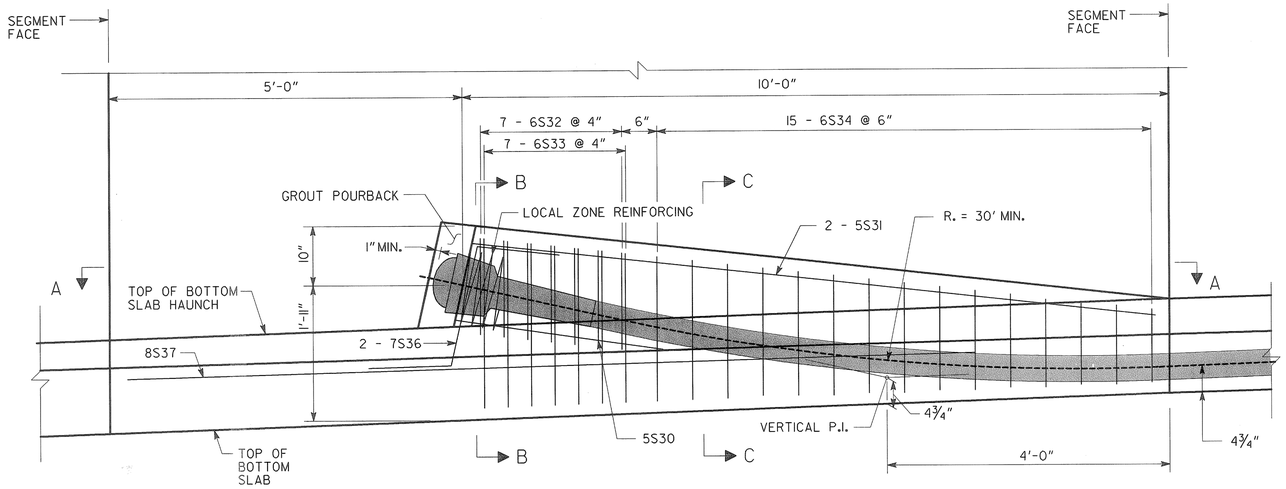

ANCHORAGE BLISTER - ELEVATION

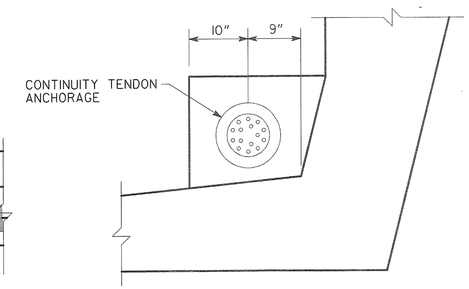

ANCHORAGE BLISTER DIMENSIONS

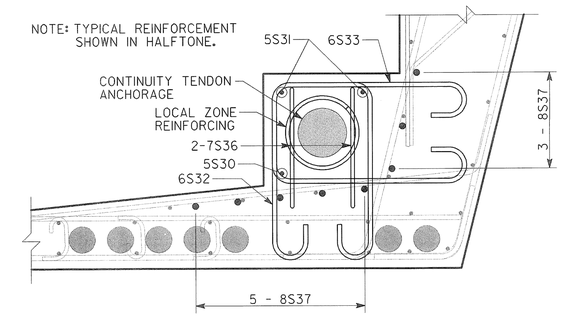

SECTION B-B

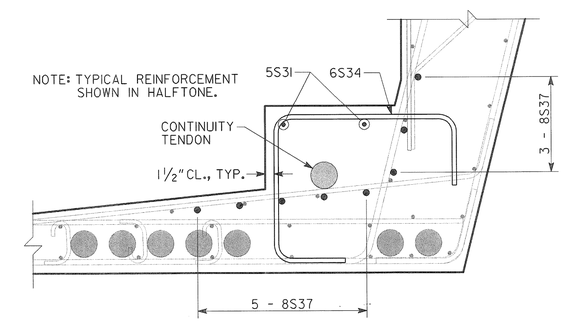

SECTION C-C

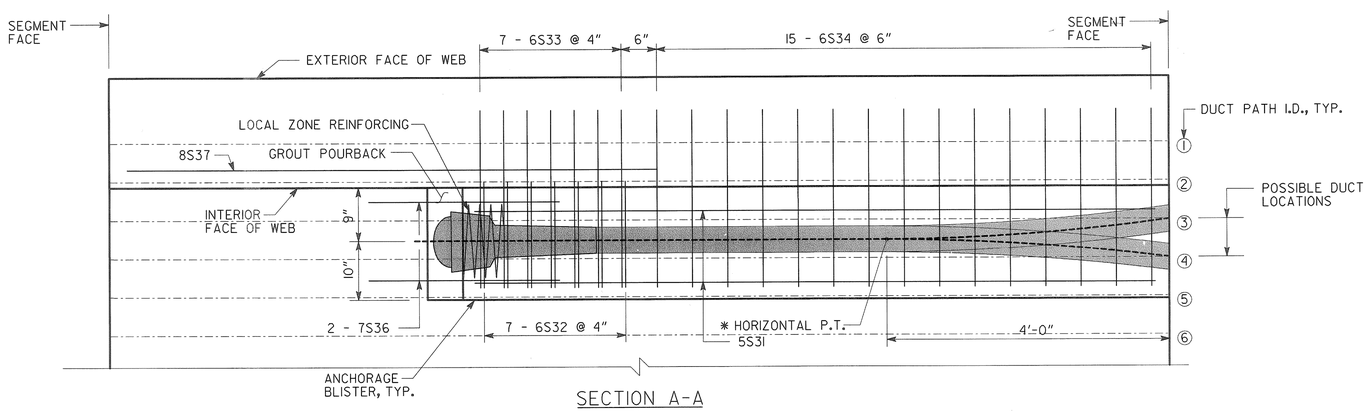

SECTION A-A

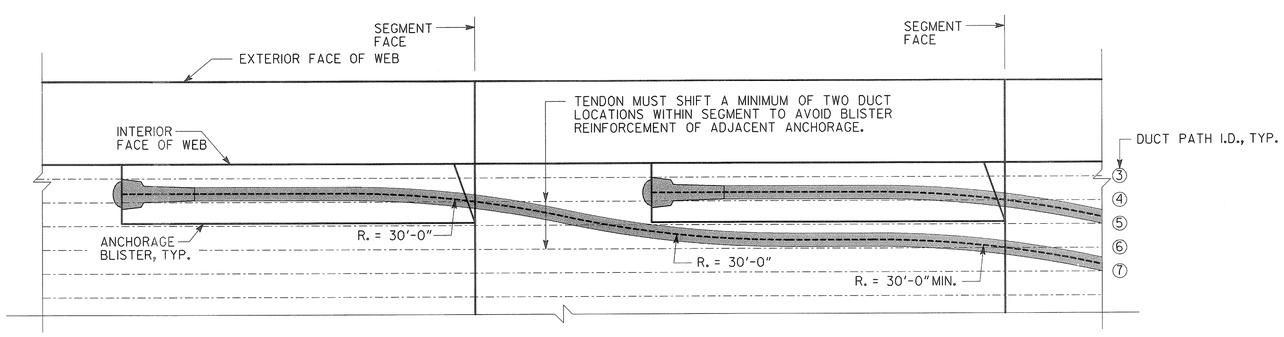

TYPICAL CONTINUITY TENDON DUCT PATH AROUND ANCHORAGE BLISTER

NO SCALE

(TWO DUCT LOCATION SHIFT SHOWN. THREE DUCT LOCATION SHIFT SIMILAR.)

NOTES:

1. MIN. DUCT RADIUS OF 30' SHALL BE MAINTAINED AT ANCHORAGES.
2. TYPICAL SEGMENT REINFORCEMENT NOT SHOWN FOR CLARITY.
3. REINFORCEMENT DETAILED HERE IS INCLUDED IN BLISTER REINFORCEMENT QUANTITIES.
4. SEE PROJECT SPECIAL PROVISIONS FOR THE GROUT POURBACK REQUIREMENTS.
5. * LOCATION OF HORIZONTAL P.I. VARIES. ALL HORIZONTAL CURVES IN DUCTS TERMINATE AT THE POINT OF TANGENCY SHOWN.

BRIDGE NO. 1

Heath & Lineback Engineers INCORPORATED
2390 CANTON ROAD, BUILDING 200
MARIETTA, GEORGIA 30066-5393
(770)424-1668

STATE OF GEORGIA
DEPARTMENT OF TRANSPORTATION
ENGINEERING DIVISION - OFFICE OF BRIDGE AND STRUCTURES

SPANS 1-3 POST-TENSIONING DETAILS
(6 OF 6)-ANCHORAGE BLISTER DETAILS
CR 1297 (BROAD AVE.) OVER FLINT RIVER

DOUGHERTY COUNTY — CSHPP-0007-00(550) CSSTP-M002-00(960)

SCALE: 1" = 1'-0" — NOVEMBER 2011

DRAWING NO.	REVISIONS	DATE	BY
35 - 025			
BRIDGE SHEET 25 OF 53			

DESIGNED	JMO/JAH	CHECKED	GBL	REVIEWED	WEI/WMD
DRAWN	JRL	DESIGN GROUP		APPROVED	BFR

1 INCH WHEN PRINTED FULL SIZE

J:/2009039/0007550/STRUCTURES\BRIDGE\PLANS\0007550_P-T DETAILS_06.DGN