STATE	PROJECT NUMBER	SHEET NO.	TOTAL SHEETS
GA.	CSHPP-0007-00(550) CSSTP-M002-00(960)	76	178

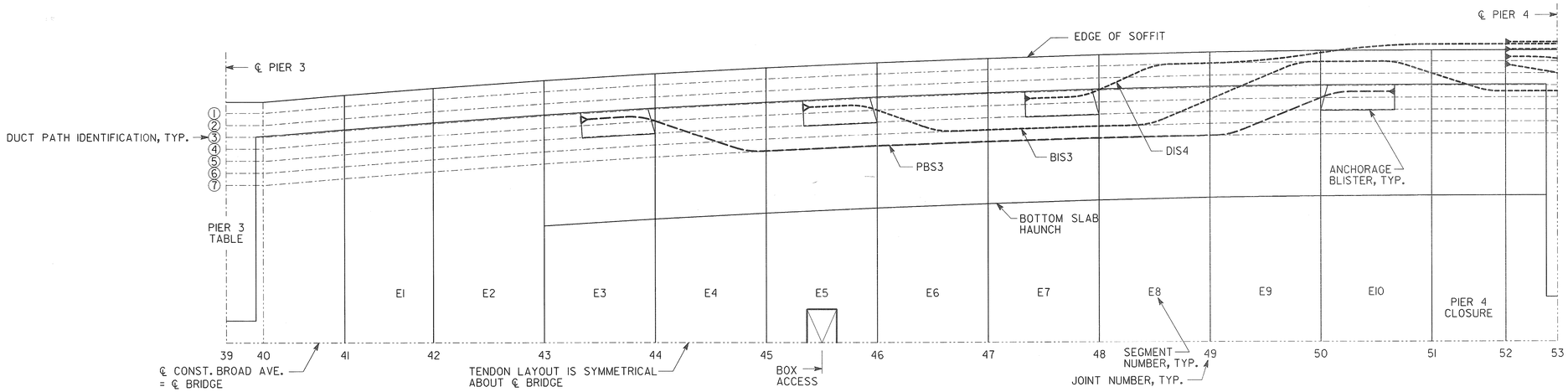

PLAN - SPAN 3 BOTTOM SLAB

SCALE: 1/8" = 1'-0" (HOR.), 3/8" = 1'-0" (VERT.)

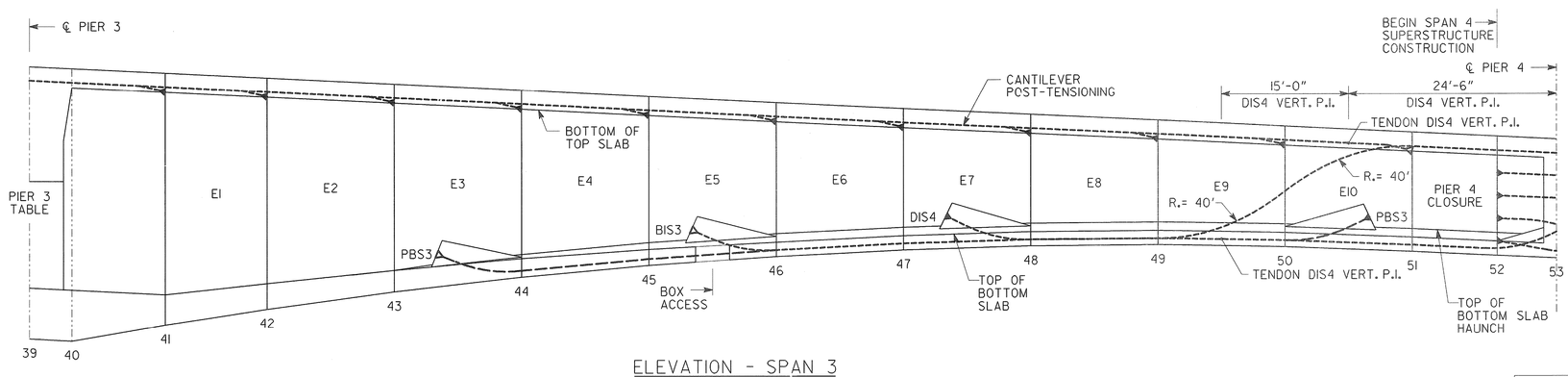

NOTE: PIER 4 DIAPHRAGM ACCESS OPENING IS NOT SHOWN IN ELEVATION VIEW FOR CLARITY.

ELEVATION - SPAN 3

SCALE: 1/8" = 1'-0" (HOR.), 1/4" = 1'-0" (VERT.)

		JOINT NUMBER						
		44	45	46	47	48	49	50	51
TENDON	DIS4	-	-	-	-	3	1	(B)	(A)
	BIS3	-	-	4	6	6	4	1	2
	PBS3	4	7	7	7	7	7	4	-

DUCT-PATH POSITION TABLE

NOTE: FOR POST-TENSIONING QUANTITIES, STRESSING DETAILS, AND NOTES, SEE POST-TENSIONING SUMMARY AND NOTES SHEET.

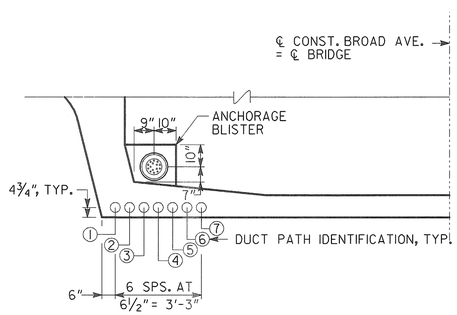

SPAN 3 CONTINUITY POST-TENSIONING DUCT AND ANCHORAGE LAYOUT

NO SCALE
(SYMMETRICAL ABOUT CENTERLINE)

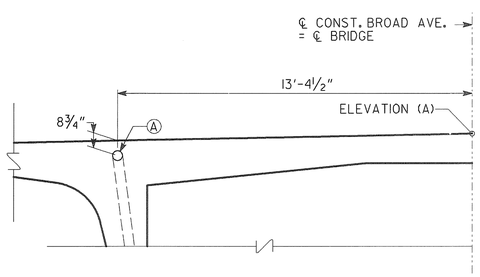

DRAPED TENDON LOCATION AT JOINTS 51 & 52

NO SCALE
(SYMMETRICAL ABOUT CENTERLINE)

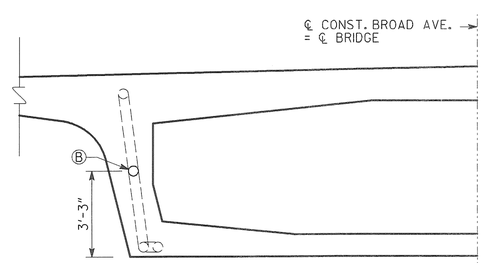

DRAPED TENDON LOCATION AT JOINT 50

NO SCALE
(SYMMETRICAL ABOUT CENTERLINE)

BRIDGE NO. 1

Heath & Lineback Engineers
INCORPORATED
2390 CANTON ROAD, BUILDING 200
MARIETTA, GEORGIA 30066-5393
(770)424-1668

STATE OF GEORGIA
DEPARTMENT OF TRANSPORTATION
ENGINEERING DIVISION - OFFICE OF BRIDGE AND STRUCTURES

SPANS 1-3 POST-TENSIONING DETAILS (5 OF 6) - SPAN 3 CONTINUITY TENDONS CR 1297 (BROAD AVE.) OVER FLINT RIVER

DOUGHERTY COUNTY

CSHPP-0007-00(550)
CSSTP-M002-00(960)

SCALE: AS NOTED

NOVEMBER 2011

DATE	REVISIONS	BY

DRAWING NO. 35 - 024

BRIDGE SHEET 24 OF 53

DESIGNED	JMO/JAH	CHECKED	BKA	REVIEWED	WEI/WMD
DRAWN	DB	DESIGN GROUP		APPROVED	BFR

1 INCH WHEN PRINTED FULL SIZE

J:\2009039\0007550\STRUCTURES\BRIDGE\PLANS\0007550_P-T DETAILS_05.DGN