STATE	PROJECT NUMBER	SHEET NO.	TOTAL SHEETS
GA.	CSHPP-0007-00(550) CSSTP-M002-00(960)	74	178

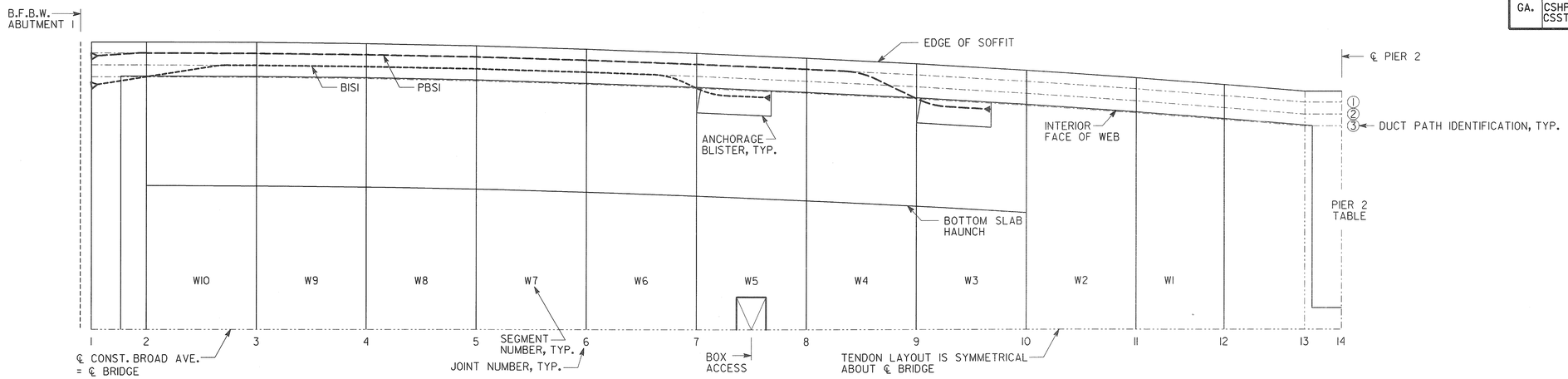

PLAN - SPAN 1 BOTTOM SLAB

SCALE: 1/8" = 1'-0" (HOR.), 3/8" = 1'-0" (VERT.)

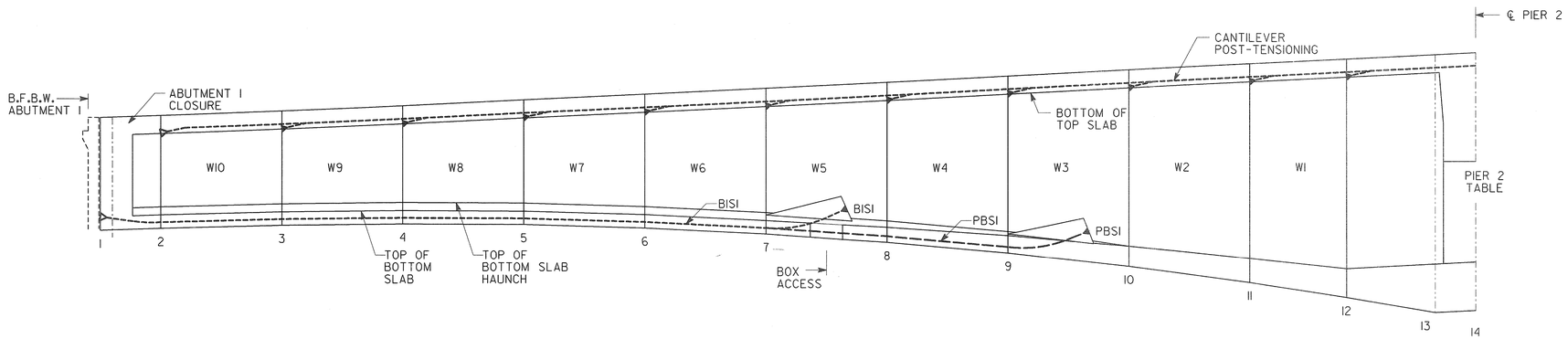

ELEVATION - SPAN 1

SCALE: 1/8" = 1'-0" (HOR.), 1/4" = 1'-0" (VERT.)

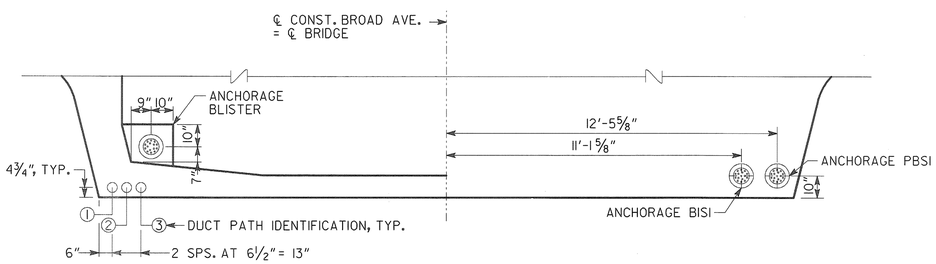

VIEW THRU BOX

END VIEW

SPAN 1 CONTINUITY POST-TENSIONING DUCT AND ANCHORAGE LAYOUT

NO SCALE
(SYMMETRICAL ABOUT CENTERLINE)

TENDON		JOINT NUMBER								
		1	2	3	4	5	6	7	8	9
	BISI	ANCH.	3	2	2	2	2	3	-	-
	PBSI	ANCH.	1	1	1	1	1	1	1	3

DUCT-PATH POSITION TABLE

NOTE: FOR POST-TENSIONING QUANTITIES, STRESSING DETAILS, AND NOTES, SEE POST-TENSIONING SUMMARY AND NOTES SHEET.

BRIDGE NO. 1

Heath & Lineback Engineers
INCORPORATED
2390 CANTON ROAD, BUILDING 200
MARIETTA, GEORGIA 30066-5393
(770)424-1668

STATE OF GEORGIA
DEPARTMENT OF TRANSPORTATION
ENGINEERING DIVISION - OFFICE OF BRIDGE AND STRUCTURES

SPANS 1-3 POST-TENSIONING DETAILS
(3 OF 6) - SPAN 1 CONTINUITY TENDONS
CR 1297 (BROAD AVE.) OVER FLINT RIVER

DOUGHERTY COUNTY — CSHPP-0007-00(550) CSSTP-M002-00(960)

REVISIONS	BY	DATE

DRAWING NO. 35 - 022

BRIDGE SHEET 22 OF 53

SCALE: AS NOTED — NOVEMBER 2011

DESIGNED	JMO/JAH	CHECKED	BKA	REVIEWED	WEI/WMD
DRAWN	DB	DESIGN GROUP		APPROVED	BFR

1 INCH WHEN PRINTED FULL SIZE

J:/2009039/0007550/STRUCTURES\BRIDGE\PLANS\0007550_P-T DETAILS_03.DGN