STATE	PROJECT NUMBER	SHEET NO.	TOTAL SHEETS
GA.	CSHPP-0007-00(550) CSSTP-M002-00(960)	71	178

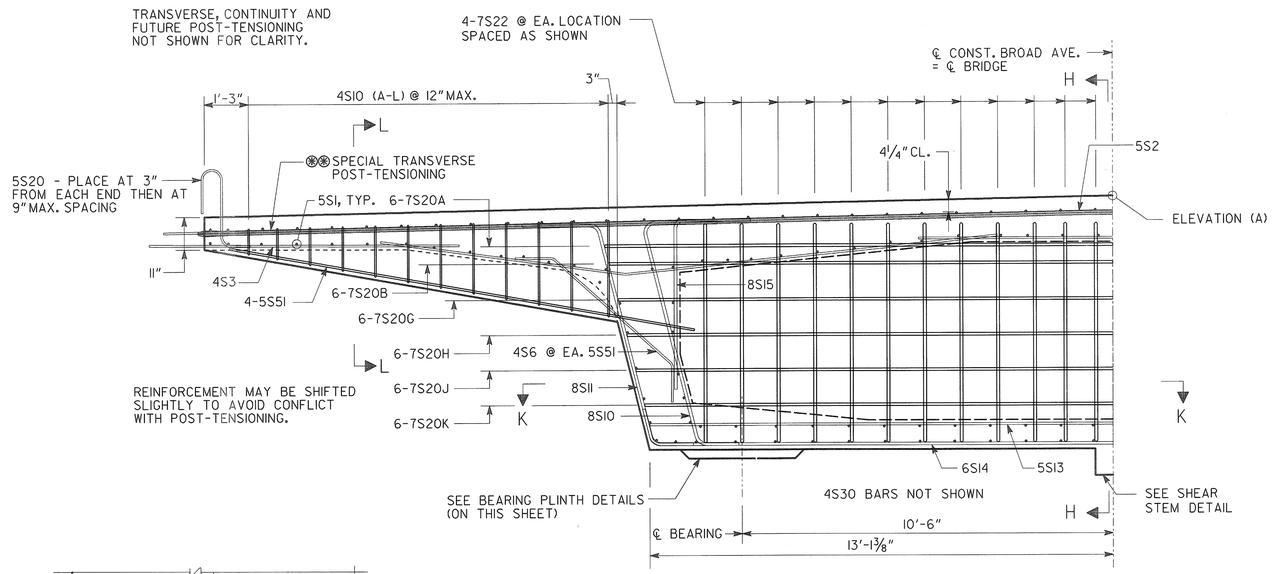

SECTION C-C
(SYMMETRICAL ABOUT CENTERLINE)

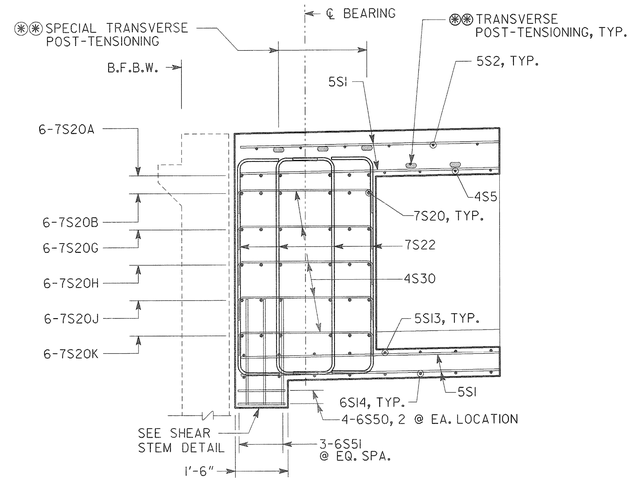

VIEW H-H

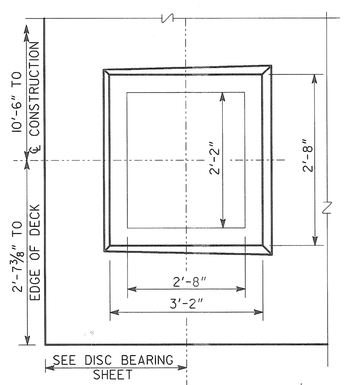

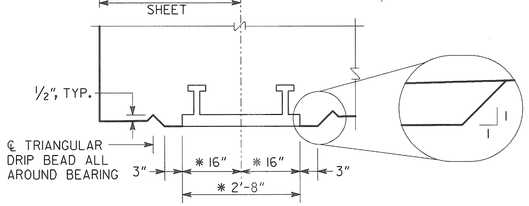

✱ ASSUMED DIMENSION OF SOLE PLATE OF CONTRACTOR DESIGNED DISC BEARING. ADJUST TO FIT ACTUAL SOLE PLATE.

BEARING PLINTH DETAILS

PLINTH IS TO BE CAST MONOLITHICALLY WITH ABUTMENT I CLOSURE.
NO SCALE

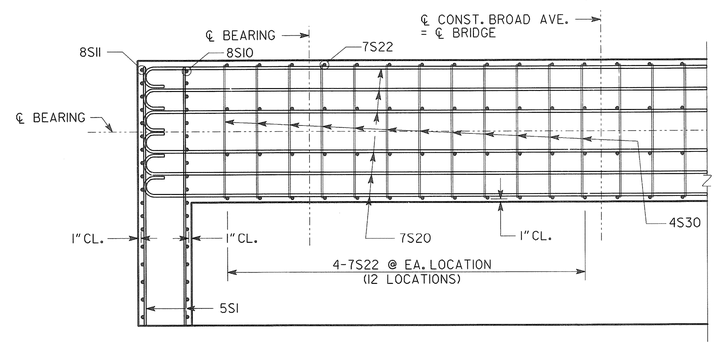

SECTION K-K
(SYMMETRICAL ABOUT CENTERLINE)

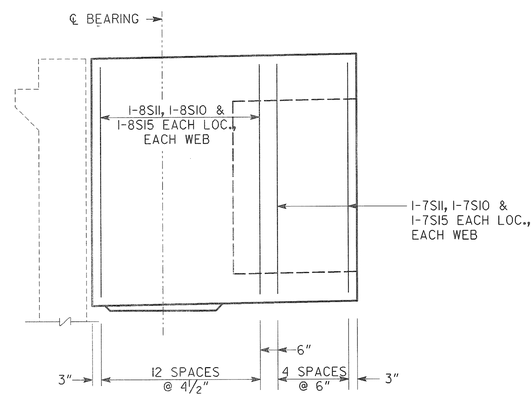

WEB REINFORCEMENT LAYOUT
REINFORCEMENT SHOWN IS PER WEB

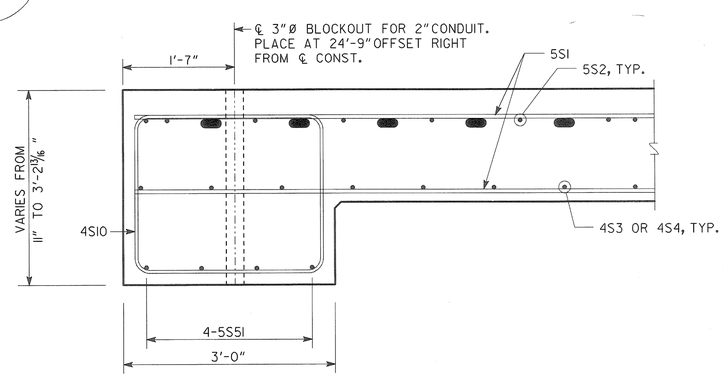

SECTION L-L
NO SCALE

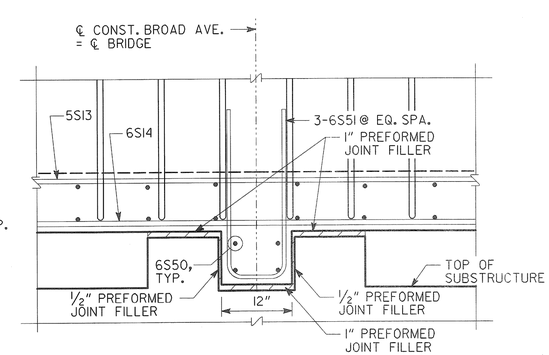

SHEAR STEM DETAIL

BRIDGE NO. 1

Heath & Lineback Engineers
INCORPORATED
2390 CANTON ROAD, BUILDING 200
MARIETTA, GEORGIA 30066-5393
(770)424-1668

STATE OF GEORGIA
DEPARTMENT OF TRANSPORTATION
ENGINEERING DIVISION - OFFICE OF BRIDGE AND STRUCTURES

ABUTMENT I CLOSURE DETAILS (2 OF 2)

CR 1297 (BROAD AVE.) OVER FLINT RIVER

DOUGHERTY COUNTY

CSHPP-0007-00(550)
CSSTP-M002-00(960)

SCALE: ⅛" = 1'-0"

NOVEMBER 2011

DRAWING NO. 35 - 019

BRIDGE SHEET 19 OF 53

BY	REVISIONS	DATE

DESIGNED JMO/JAH	CHECKED GBL	REVIEWED WEI/WMD
DRAWN DB	DESIGN GROUP	APPROVED BFR

1 INCH WHEN PRINTED FULL SIZE

J:\2009039\0007550\STRUCTURES\BRIDGE\PLANS\0007550_ABUTMENT I-CLOSURE DETAILS_02.DGN