STATE	PROJECT NUMBER	SHEET NO.	TOTAL SHEETS
GA.	CSHPP-0007-00(550) CSSTP-M002-00(960)	60	178

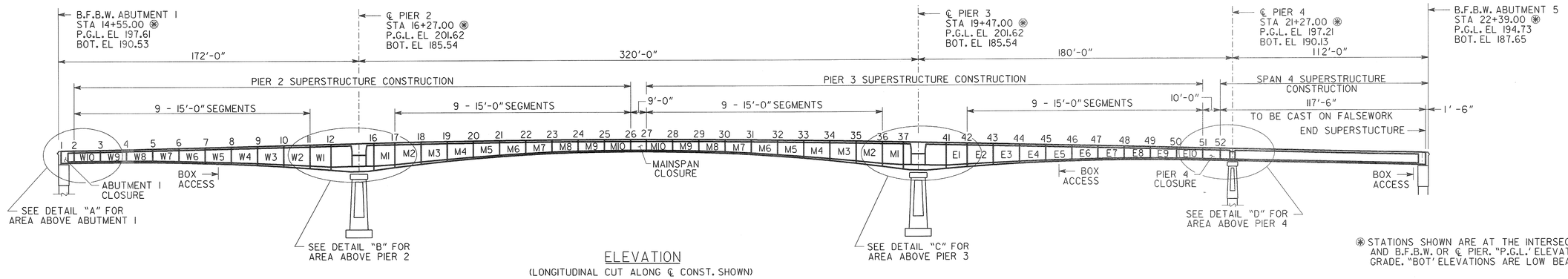

ELEVATION
(LONGITUDINAL CUT ALONG ℄ CONST. SHOWN)

⊛ STATIONS SHOWN ARE AT THE INTERSECTION OF ℄ CONST. AND B.F.B.W. OR ℄ PIER. "P.G.L." ELEVATIONS ARE PROFILE GRADE. "BOT" ELEVATIONS ARE LOW BEAM.

JOINT NO.	1	2	3	4	5	6	7	8	9	10	11	12	* 13	* 14	* 15	16	17	18	19	20	21	22	23	24	25	26
ELEVATION (A)	197.718	197.841	198.122	198.448	198.812	199.179	199.547	199.914	200.282	200.649	201.017	201.311	201.580	201.703	201.824	201.906	202.173	202.476	202.745	202.979	203.179	203.345	203.476	203.572	203.634	203.662
DEPTH OF BOX (FT) (D)	7.167	7.167	7.248	7.491	7.897	8.465	9.195	10.087	11.141	12.358	13.737	14.957	16.167	16.167	16.167	15.753	14.408	12.888	11.547	10.385	9.402	8.597	7.971	7.524	7.256	7.167
BOT. SLAB THICKNESS (IN) (T)	10.000	10.000	10.000	10.000	10.000	10.000	10.000	11.250	13.000	15.000	18.000	21.500	36.000	36.000	36.000	30.000	19.250	16.000	13.500	11.500	10.000	10.000	10.000	10.000	10.000	10.000
NUMBER OF SHEAR KEYS PER WEB	N/A	3	3	3	3	3	4	5	5	6	7	8	N/A	N/A	N/A	8	8	7	6	5	4	4	3	3	3	3

JOINT NO.	27	28	29	30	31	32	33	34	35	36	37	* 38	* 39	* 40	41	42	43	44	45	46	47	48	49	50	51	52	℄ PIER 4	END SPAN 4
ELEVATION (A)	203.662	203.634	203.572	203.475	203.345	203.179	202.979	202.745	202.476	202.173	201.906	201.823	201.703	201.580	201.311	201.017	200.649	200.282	199.914	199.547	199.179	198.811	198.444	198.076	197.709	197.464	197.292	194.837
DEPTH OF BOX (FT) (D)	7.167	7.256	7.524	7.971	8.597	9.402	10.385	11.547	12.888	14.408	15.753	16.167	16.167	16.167	14.957	13.737	12.358	11.141	10.087	9.195	8.465	7.897	7.491	7.248	7.167	7.167	7.167	7.167
BOT. SLAB THICKNESS (IN) (T)	10.000	10.000	10.000	10.000	10.000	10.000	11.500	13.500	16.000	19.250	30.000	36.000	36.000	36.000	21.500	18.000	15.000	13.000	11.250	10.000	10.000	10.000	10.000	10.000	10.000	10.000	10.000	10.000
NUMBER OF SHEAR KEYS PER WEB	3	3	3	3	4	4	5	6	7	8	8	N/A	N/A	N/A	8	7	6	5	5	4	3	3	3	3	3	N/A	N/A	N/A

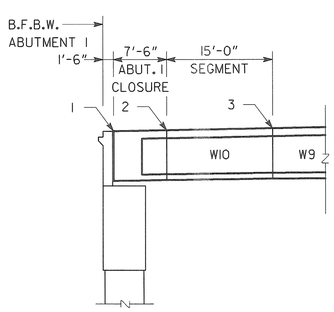

DETAIL "A"
NO SCALE

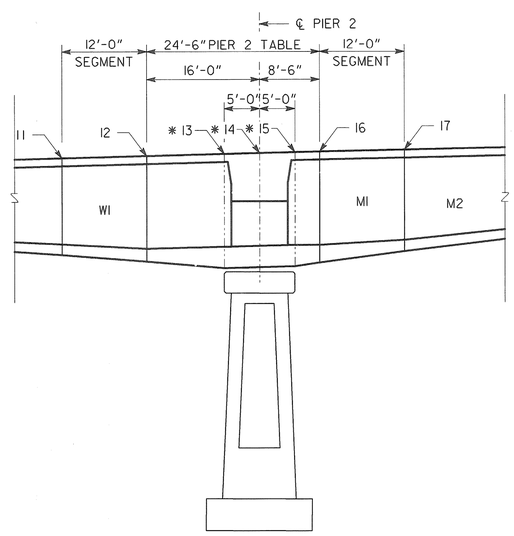

DETAIL "B"
NO SCALE

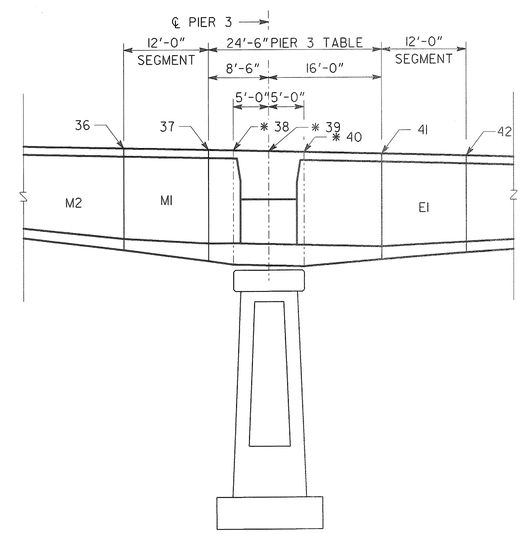

DETAIL "C"
NO SCALE

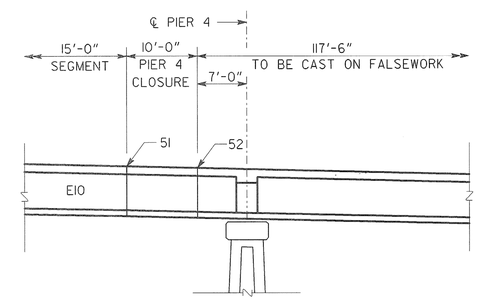

DETAIL "D"
NO SCALE

* JOINTS 13, 14, 15, 38, 39 AND 40 ARE NOT CONSTRUCTION JOINTS. THEY INDICATE LOCATIONS OF CRITICAL GEOMETRY POINTS.

BRIDGE NO. 1

Heath & Lineback Engineers INCORPORATED
2390 CANTON ROAD, BUILDING 200
MARIETTA, GEORGIA 30066-5393
(770)424-1668

STATE OF GEORGIA
DEPARTMENT OF TRANSPORTATION
ENGINEERING DIVISION - OFFICE OF BRIDGE AND STRUCTURES

STRUCTURE LAYOUT & DIMENSIONS
(1 OF 2)
CR 1297 (BROAD AVE.) OVER FLINT RIVER
DOUGHERTY COUNTY
CSHPP-0007-00(550)
CSSTP-M002-00(960)

SCALE: 1" = 30'-0"
NOVEMBER 2011

DRAWING NO. 35 - 008
BRIDGE SHEET 8 OF 53

REVISIONS | DATE | BY

DESIGNED JMO/JAH | CHECKED BKA | REVIEWED WEI/WMD
DRAWN GTP | DESIGN GROUP | APPROVED BFR

1 INCH WHEN PRINTED FULL SIZE

J:/2009039/0007550/STRUCTURES\BRIDGE\PLANS\0007550_STRUCTURE_LAYOUT_OLDGN