STATE	PROJECT NUMBER	SHEET NO.	TOTAL SHEETS
GA	CSNHS-0007-00(421)	16	773

SLOPE CONTROLS		
SLOPE	CUT	FILL
4:1	——	0-10'
2:1	ALL	OVER 10'

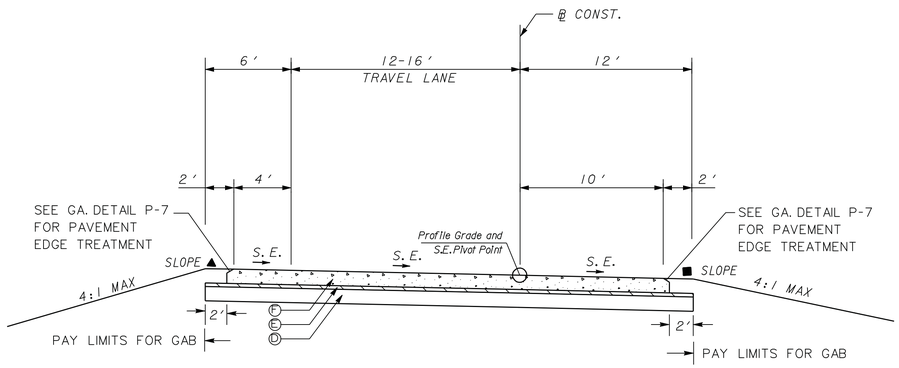

TYPICAL SECTION 20
SUPERELEVATED SECTION
FULL DEPTH CONCRETE
NB ENTRANCE RAMP D - SR 251 TO I-95
STA. 501+66.00 TO STA. 512+10.30
SEE PLANS FOR S.E. RATES

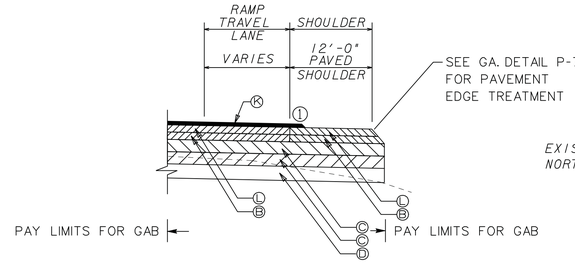

TYPICAL SECTION 21
RAMP TAPER DETAIL
FULL DEPTH ASPHALT
RAMP B STA. 308+94.89 TO STA. 317+40.93
RAMP C STA. 400+00.00 TO STA. 406+38.95
RAMP D STA. 514+05.00 TO STA. 541+60.30

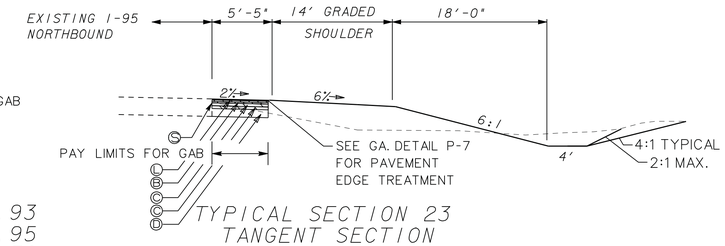

TYPICAL SECTION 23
TANGENT SECTION
FULL DEPTH ASPHALT SHOULDER
I-95 NORTHBOUND
STA. 264+50.00 TO STA. 267+50.00

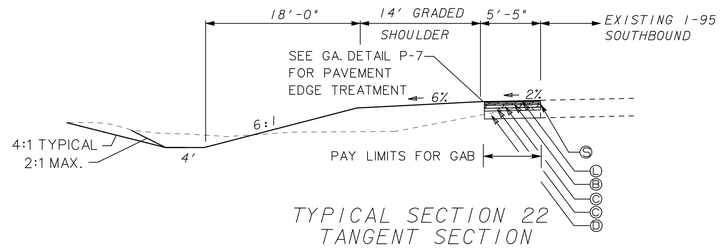

TYPICAL SECTION 22
TANGENT SECTION
FULL DEPTH ASPHALT SHOULDER
I-95 SOUTHBOUND
STA. 266+20.00 TO STA. 269+50.00

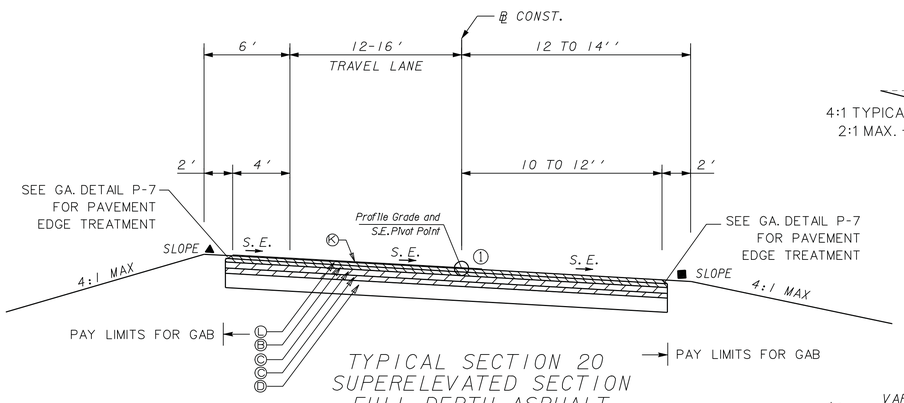

TYPICAL SECTION 20
SUPERELEVATED SECTION
FULL DEPTH ASPHALT
NB ENTRANCE RAMP D - SR 251 TO I-95
STA. 512+10.30 TO STA. 514+05.00
SEE PLANS FOR S.E. RATES

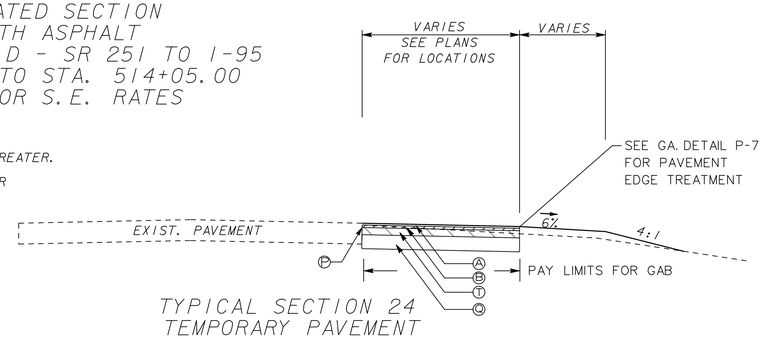

TYPICAL SECTION 24
TEMPORARY PAVEMENT

■ NORMAL SHOULDER SLOPE OR RATE OF SE, WHICHEVER IS GREATER.

▲ NORMAL SOULDER SLOPE, NOT TO EXCEED MAXIMUM SHOULDER BREAKOVER OF 8%.

ALGEBRAIC DIFFERENCE IN PAVING AND SHOULDER SLOPES NOT TO EXCEED 8%.

① ASPHALTIC CONCRETE 12.5 mm PEM SHALL EXTEND 18 INCHES BEYOND THE TRAVEL LANE ON THE OUTSIDE

REQUIRED PAVEMENT

- Ⓐ RECYCLED ASPH CONC 9.5 mm SUPERPAVE, TYPE II, GP 2 ONLY, INCL BITUM MATL & H LIME, 135 LBS/SY
- Ⓑ RECYCLED ASPH CONC 19 mm SUPERPAVE, GP 1 OR 2, INCL BITUM MATL & H LIME, 220 LBS/SY
- Ⓒ RECYCLED ASPH CONC 25 mm SUPERPAVE, GP 1 OR 2, INCL BITUM MATL & H LIME, 440 LBS/SY
- Ⓓ GR AGGR BASE CRS, INCL MATL, 12"
- Ⓔ RECYCLED ASPH CONC 19 mm SUPERPAVE, GP 1 OR 2, INCL BITUM MATL & H LIME, 330 LBS/SY
- Ⓕ PLAIN PC CONC PVMT, CL 1 CONC, 10 INCH THK
- Ⓖ CONC. CURB & GUTTER 8" X 30" GA. STD. 9032B, TYP 2
- Ⓗ CONC. MEDIAN, 4 IN
- Ⓘ CONC. SIDEWALK , 4 IN
- Ⓙ RECYCLED ASPH CONC LEVELING, INCL BITUM MATL & H LIME, AS DIRECTED BY ENGINEER
- Ⓚ ASPH CONC 12.5 mm PEM, GP 2 ONLY, INCL POLYMER-MODIFIED BITUM MATL & H LIME, 135 LBS/SY
- Ⓛ RECYCLED ASPH CONC 9.5 mm SUPERPAVE, TYPE II, GP 2 ONLY, INCL BITUM MATL & H LIME, 220 LBS/SY
- Ⓜ MILL ASPH CONC PVMT, 1¼ IN DEPTH
- Ⓟ PVMT REINF FABRIC STRIPS, TP 2, 18 IN WIDTH
- Ⓠ GR AGGR BASE CRS, INCL MATL, 8"
- Ⓡ 4" STAMPED CONCRETE
- Ⓢ HIGH STRENGTH PVMT REINF FABRIC, 18 IN WIDTH
- Ⓣ RECYCLED ASPH CONC 25 mm SUPERPAVE, GP 1 OR 2, INCL BITUM MATL & H LIME, 330 LBS/SY

THE LPA GROUP
TRANSPORTATION CONSULTANTS
3595 ENGINEERING DRIVE
NORCROSS, GEORGIA 30092
(770) 263-9118

REVISION DATES

STATE OF GEORGIA
DEPARTMENT OF TRANSPORTATION
OFFICE: PROGRAM DELIVERY

TYPICAL SECTIONS

DRAWING No. 5-009