STATE	PROJECT NUMBER	SHEET NO	TOTAL SHEETS
GA.	CSSTP-0007-00(415)	96	145

ALTERNATE (APPLICABLE TO EITHER NORMAL OR SKEWED CULVERTS)

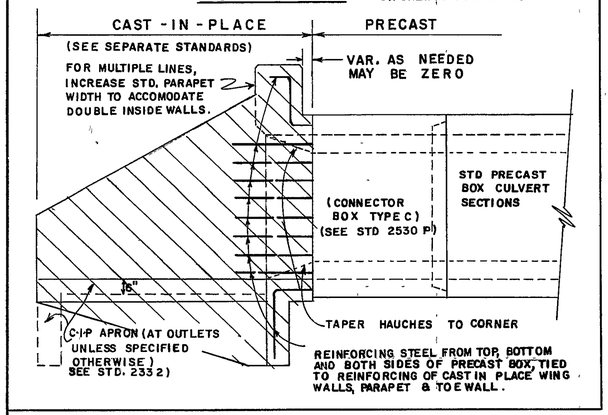

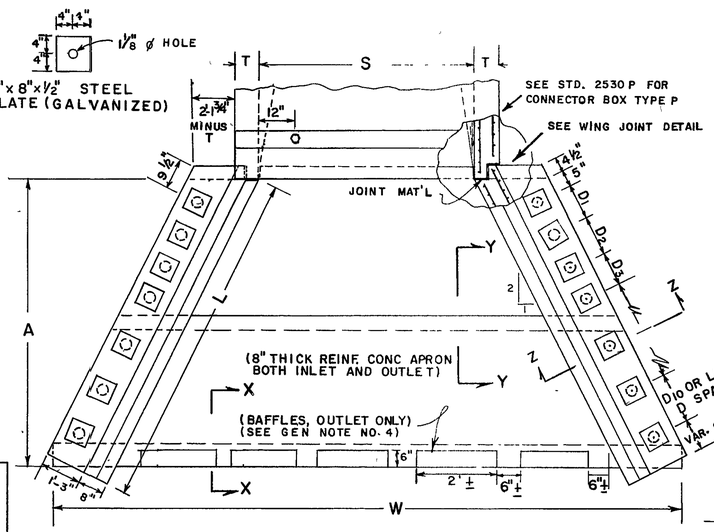

NOTE: EACH PARAPET SHALL BE BOLTED TO BOX WITH TWO-3/4"ø GALV. BOLTS WITH 2 GALV. WASHERS WITH EACH BOLT (FURNISHED BY MANUFACTURER)

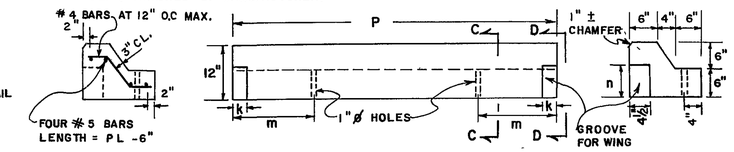

TABLE 1 - PARAPET DIMENSIONS				
S	K	m	n	P
4'	2"	1'-6"	9"	5'-0"
5'	2"	1'-6"	8"	6'-0"
6'	3"	1'-7"	7"	7'-2"
7'	4"	1'-8"	7"	8'-4"
8'	4"	1'-8"	7"	9'-4"
9'	5"	1'-9"	6"	10'-6"
10'	6"	1'-10"	5"	11'-8"

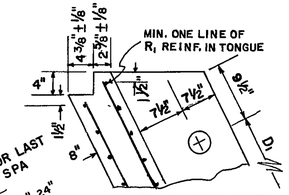

WING JOINT DETAIL

TABLE 2 - WINGWALL DIMENSIONS, ANCHOR SPACINGS, WINGWALL & APRON REINFORCING																
CULVERT HEIGHT (RISE)	APRON	WINGWALL (±1") DIMENSIONS			MAX. SPACINGS (INCHES) FOR WINGWALL TO APRON ANCHOR CONNECTIONS EACH WING. SEE NOTE #3 (±1/2")										▼STEEL AREAS SQ. IN./LIN FT	
H	A	L	h_1	h_2	D_1	D_2	D_3	D_4	D_5	D_6	D_7	D_8	D_9	D_{10}	R_1	R_2
3'	6'	6'-8"	2'-8"	1'-6"	48"	66"									0.19	0.19
4'	8'	9'-2"	3'-8"	1'-6"	48"	66"									0.19	0.19
5'	8'	9'-2"	3'-8"	2'-6"	48"	66"									0.19	0.19
6'	12'	13'-4"	5'-4"	1'-10"	31"	48"	66"								0.20	0.19
7'	12'	13'-4"	5'-4"	2'-10"	20"	31"	31"	48"	66"						0.32	0.19
8'	16'	18'-4"	7'-4"	1'-10"	15"	20"	20"	31"	48"	66"					0.48	0.19
9'	16'	18'-4"	7'-4"	2'-10"	12"	12"	15"	15"	20"	20"	31"	48"	66"		0.68	0.19
10'	16'	18'-4"	7'-4"	3'-10"	12"	12"	12"	12"	15"	15"	20"	20"	31"	48"	0.93	0.19

▼STEEL AREAS FOR R_3, R_4, R_5 & R_6 SHALL BE THE SAME AS FOR R_2

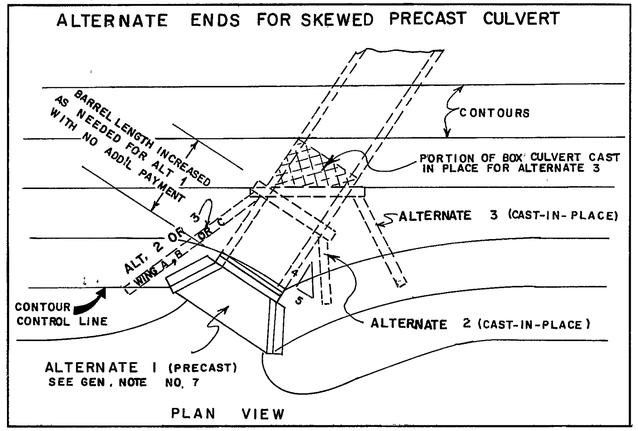

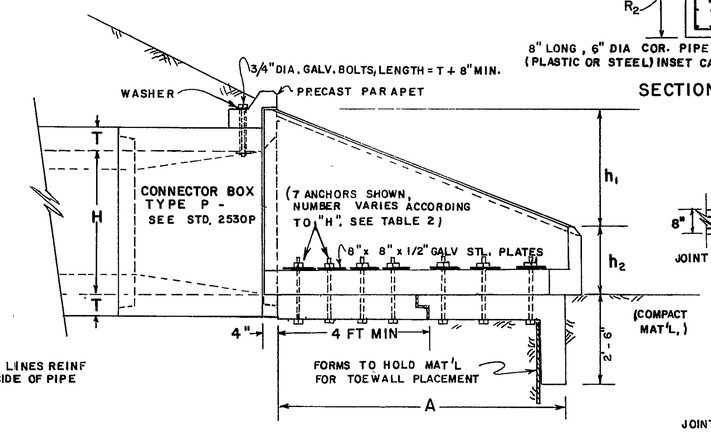

SECTION THRU WING

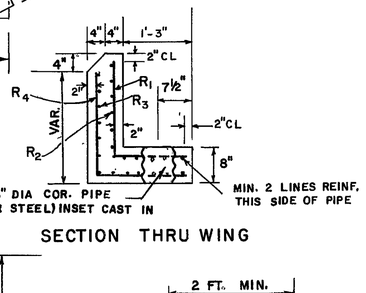

TABLE 3-✗ TOEWALL WIDTHS		
S	H	W (±¼")
4'	3	13'-7½"
	4	15'-7½"
	5	15'-7½"
	6	19'-7½"
5'	3	14'-7½"
	4	16'-7½"
	5	16'-7½"
	6	20'-7½"
6'	3	15'-7½"
	4	17'-7½"
	5	17'-7½"
	6	21'-7½"
7'	4	18'-7½"
	5	18'-7½"
	6	22'-7½"
	7	22'-7½"
8'	4	19'-7½"
	5	19'-7½"
	6	23'-7½"
	7	23'-7½"
	8	27'-7½"
9'	4	20'-7½"
	5	20'-7½"
	6	24'-7½"
	7	24'-7½"
	8	28'-7½"
	9	28'-7½"
	10	28'-7½"
10'	4	21'-7½"
	5	21'-7½"
	6	25'-7½"
	7	25'-7½"
	8	29'-7½"
	9	29'-7½"
	10	29'-7½"

✗NOTE: WIDTHS ARE FOR SINGLE LINES; FOR MULTIPLE LINES ADD S + 2T + "X" FOR EACH ADDITIONAL LINE; WHERE S = CLEAR SPAN, T = WALL THICKNESS, & "X" = SPACE BETWEEN LINES.

GENERAL NOTES:

1. SPECIFICATION: GA. STANDARD, CURRENT EDITION & SUPPLEMENTS THERETO.
2. MATERIALS FOR PRECAST PARAPETS, PRECAST WINGWALLS AND PRECAST APRONS SHALL BE 5000 P.S.I. CONCRETE (SEC. 500) AND WELDED WIRE FABRIC OR GRADE 60 REBARS. CAST-IN-PLACE CONSTRUCTION SHALL BE CLASS "A" CONCRETE AND GRADE 40 REBARS.
3. ALL PRECAST WINGWALLS (BOTH INLET & OUTLET) REQUIRE 8" THICK REINFORCED CONCRETE APRONS FOR ANCHOR-CONNECTIONS. APRONS MAY BE PRECAST OR CAST IN PLACE. SPACINGS (IN TABLE 2) FOR WINGWALL TO APRON CONNECTIONS ARE MAXIMUM AND MAY BE REDUCED DUE TO WING LENGTH, APRON JOINTS, ETC. EACH APRON SECTION MUST HAVE A MINIMUM OF 2 CONNECTIONS ON EACH SIDE OR AS REQUIRED BY TABLE 2, WHICHEVER IS MORE.
4. OUTLET BAFFLES SHALL BE CL.A CONCRETE MIN. REINFORCED WITH NO. 4 REBARS, BAFFLES MAY BE FIELD CAST ONTO NO. 4 REBARS GROUTED 6" MIN. INTO APRON OR PRECAST BAFFLES MAY BE SECURED TO APRON BY GROUTING BARS EXPOSED FROM BAFFLES INTO APRON 6" MIN. OR SECURED WITH NO. 4 GALV. EXPANSION ANCHOR BOLTS. 2 DOWEL CONNECTIONS OR 2 ANCHORS SHALL BE REQUIRED FOR EACH SEPARATE BAFFLE OR BAFFLES MAY BE CONSTRUCTED MONOLITHIC WITH APRON.
5. SEE STANDARD 2530P FOR DETAILS OF PRECAST BOX CULVERTS AND CONNECTOR BOXES TYPE P & TYPE C
6. LIFTING HOLES AND HANDLING DEVICES SHALL BE ACCORDING TO GA. STD. SPECIFICATIONS AND MAY VARY PER MANUFACTURER. PRECAST SECTIONS ARE NOT TO BE LIFTED BY OR THRU THE PIPE SLEEVE INSETS.
7. PRECAST ENDS ARE STANDARD ALTERNATES FOR SINGLE OR FOR MULTIPLE LINE PRECAST BOX CULVERT BARRELS NORMAL TO THE ROADWAY. SKEWED INSTALLATIONS MAY HAVE PRECAST ENDS WHERE ROADSIDE GEOMETRICS ARE COMPATABLE. THE ALLOWANCE OF PRECAST ENDS WITH SKEWED PRECAST BARRELS, EITHER SINGLE OR MULTIPLE LINE, SHALL BE AS SHOWN IN THE PLANS OR APPROVED BY THE ENGINEER FOR A GIVEN LOCATION. CAST-IN-PLACE ENDS (SEE SEPARATE STANDARDS) SHALL BE USED FOR EITHER SKEWED OR NON-SKEWED PRECAST BARRELS WHERE PRECAST ENDS ARE NOT USED.

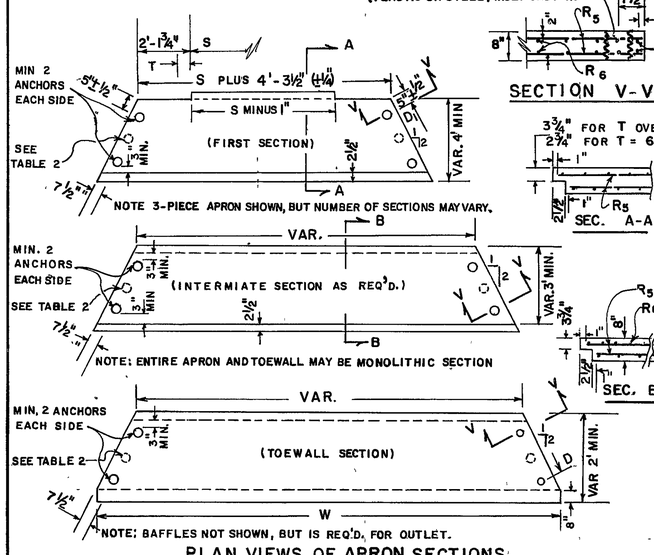

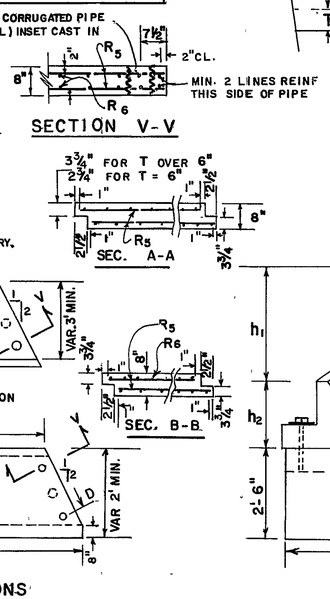

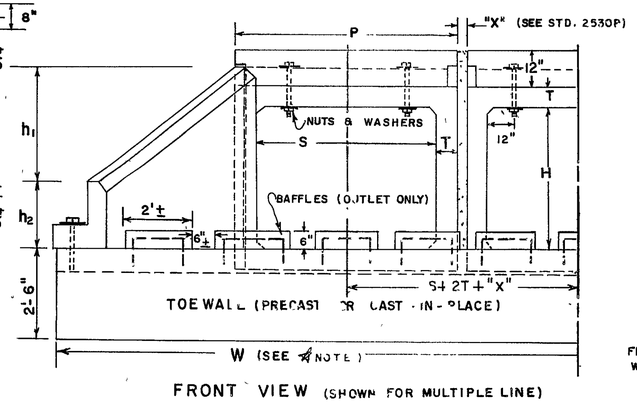

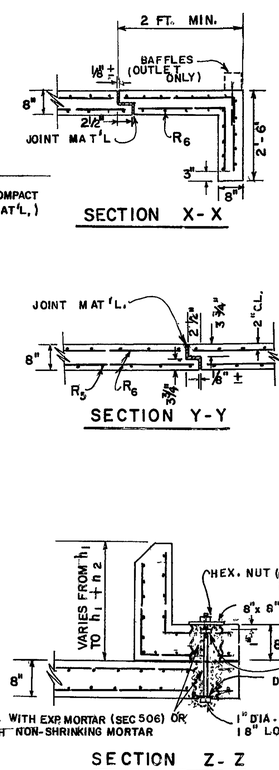

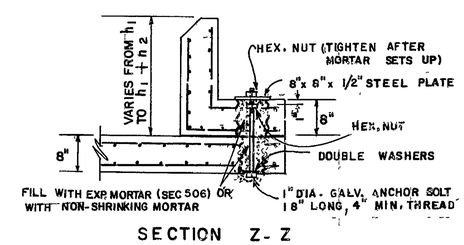

DEPARTMENT OF TRANSPORTATION
STATE OF GEORGIA

STANDARD PRECAST BOX CULVERT ENDS
WINGWALLS, PARAPETS, TOEWALLS & APRONS

NO SCALE — MARCH, 1985

DES. R.M.U.
DRW. R.M.U.
TRA. G.M.E.
CHK. R.K.C.

(SUBMITTED) Hayes Sanders — STATE ROAD & AIRPORT DESIGN ENGR.
(APPROVED) Hal Ruegsegger — STATE HIGHWAY ENGINEER

NUMBER 2535P

FORM EF00003