| STATE | PROJECT NUMBER | SHEET NO | TOTAL SHEETS |
|---|---|---|---|
| GA. | CSSTP-0007-00(415) | 89 | 145 |

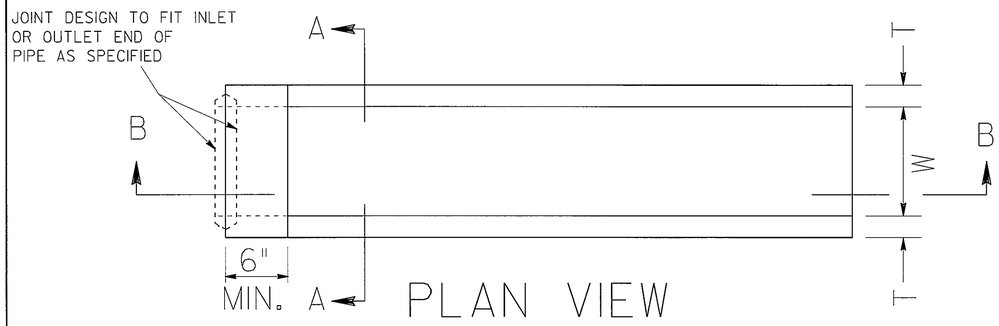


PLAN VIEW

(BAR GRATE NOT SHOWN)

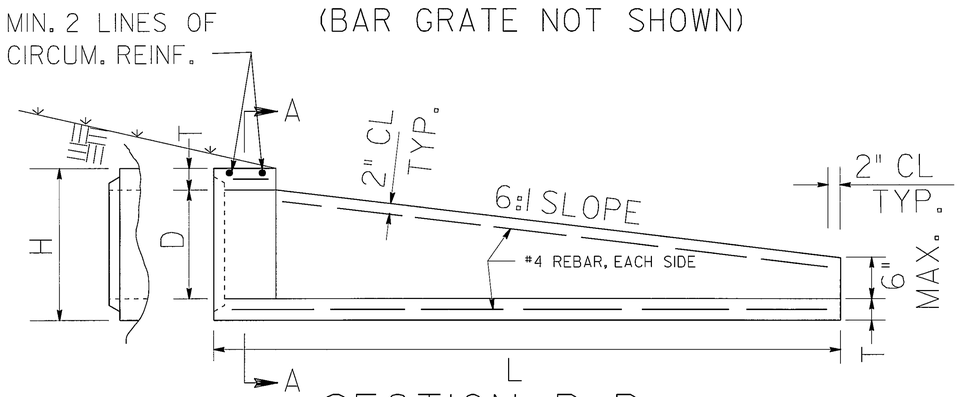


SECTION B-B

ALTERNATE 3

| PIPE DIA | T (MIN) | D | H | L |
|---|---|---|---|---|
| 15" | 3" | 15" | 21" | 4'-6" |
| 18" | 3" | 18" | 24" | 6'-0" |
| 24" | 3" | 24" | 30" | 9'-0" |
| 30" | 4" | 30" | 38" | 12'-6" |
| 36" | 4" | 36" | 44" | 15'-6" |
| 42" | 4" | 42" | 50" | 18'-6" |
| 48" | 5" | 48" | 58" | 22'-0" |

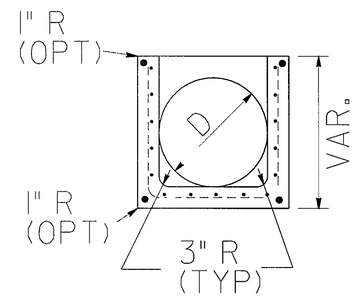


SECTION A-A

GENERAL NOTES:

1. CONCRETE STRENGTH SHALL BE 4000 PSI MINIMUM
2. REINFORCING SHALL BE PER AASHTO M170, CLASS II REINFORCED CONCRETE PIPE, PLUS ONE #4 BAR TOP AND BOTTOM, EACH SIDE.
3. WALLS MAY HAVE 1/4" TAPER. WALL THICKNESSES SHOWN ARE THE MINIMUM.
4. LIFT HOLES MAY BE PROVIDED IN THE SIDE WALLS FOR HANDLING.
5. END SECTION JOINT WILL BE A MATCHED FIT TO THE ADJOINING PIPE JOINT AT ALL INLET AND OUTLET ENDS. NON-FITTING JOINTS WILL REQUIRE A BUILT-IN-PLACE REINFORCED COLLAR CONNECTION WITH NO ADDITIONAL PAYMENT.
6. ALL END SECTIONS FOR PIPES WITH "D" OVER 24" ON SINGLE LINES WILL HAVE GALV. SAFETY BARS, SPACED NOT MORE THAN 24" ON CENTERS, AND INSTALLED PERPENDICULAR TO THE MAINLINE TRAFFIC FLOW. ALL END SECTIONS FOR MULTIPLE LINE PIPES WILL HAVE GRATES.
7. TYPICAL USE OF SAFETY END SECTIONS IS AT THE ENDS OF PIPES UNDER DRIVEWAYS OR SIDEROADS WHERE THE PIPE CULVERT IS PARALLEL TO THE MAINLINE AND FALLS INSIDE THE MAINLINE CLEAR ZONE WIDTH.

| D | (MIN) GRATE LENGTH | GRATE WIDTH (TYP) # |
|---|---|---|
| 15" | 2'-4" | 1'-9 5/8" |
| 18" | 2'-4" | 2'-0 5/8" |
| 24" | 6'-4" | 2'-6 5/8" |
| 30" | 8'-6" | 3'-2 5/8" |
| 36" | 12'-4" | 3'-8 5/8" |
| 42" | 14'-6" | 4'-2 5/8" |
| 48" | 18'-4" | 4'-10 5/8" |

# TYPICAL GRATE WIDTHS SHOWN ARE MEASURED FROM INSIDE TO INSIDE OF THE 3/8" THICK ANGLE IRON. GRATE FIT WITH END SECTION SHALL BE CHECKED BEFORE DELIVERY.

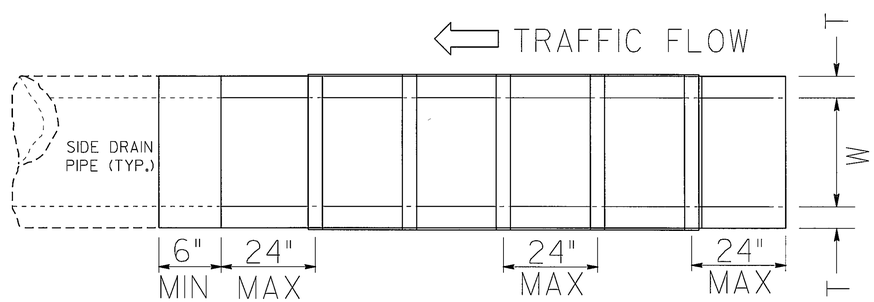


PLAN VIEW

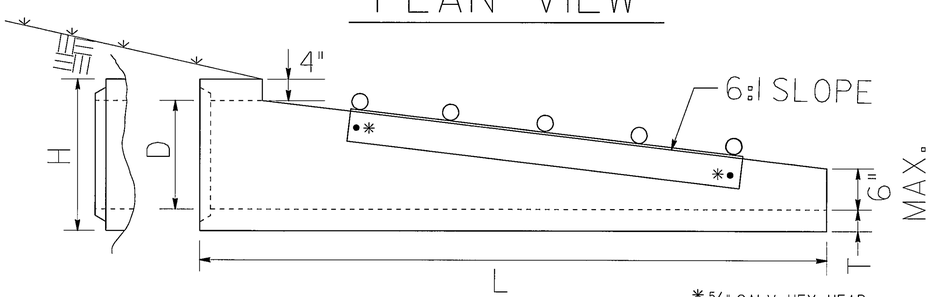


SIDE VIEW

* 5/8" GALV. HEX HEAD BOLT, WASHER & NUT (FOUR) CONNECTIONS

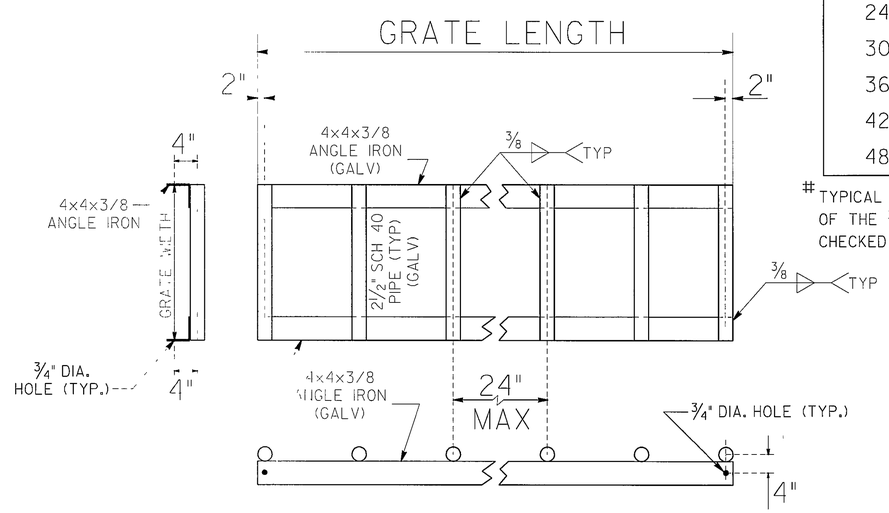


GALVANIZED SAFETY GRATE DETAIL

DEPARTMENT OF TRANSPORTATION
STATE OF GEORGIA

STANDARD
SAFETY END SECTION
(CONCRETE)
(FOR SIDE DRAIN PIPE-OR FOR STORM DRAIN PIPE PARALLEL TO MAINLINE)
ALTERNATE 3

NO SCALE — OCT., 2000

| REVISION | DATE |
|---|---|
| REVISED TO 1122 PAGE 3 | 1-28-05 |

G.L.O. BY — DESIGNED ___ DRAWN ___ TRACED ___ CHECKED ___

(SUBMITTED) STATE ROAD & AIRPORT DESIGN ENGINEER

(APPROVED) CHIEF ENGINEER

NUMBER 1122

SHEET 3 OF 3