STATE	PROJECT NUMBER	SHEET NO.	TOTAL SHEETS
GA.	CSSTP-0007-00(415)	79	145

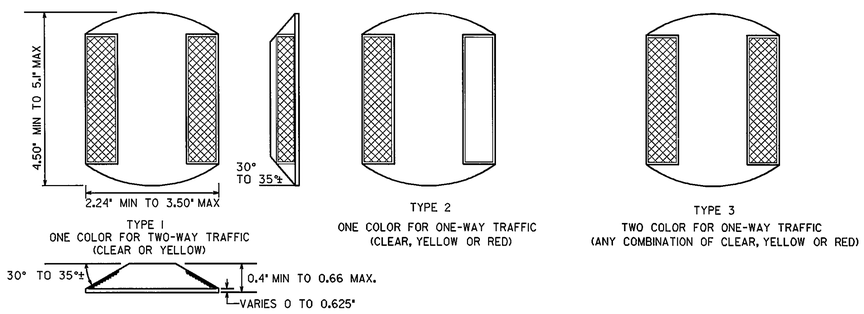

RAISED REFLECTIVE MARKERS

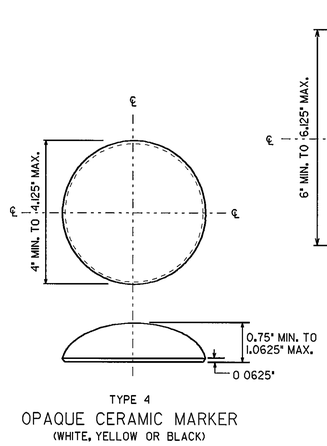

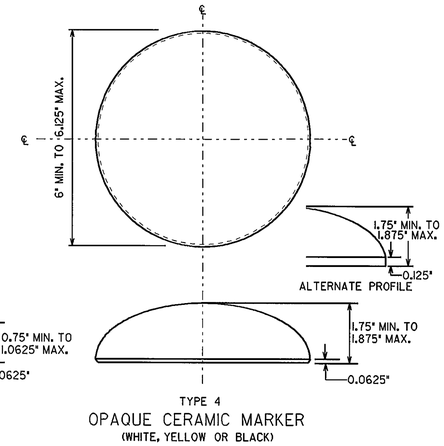

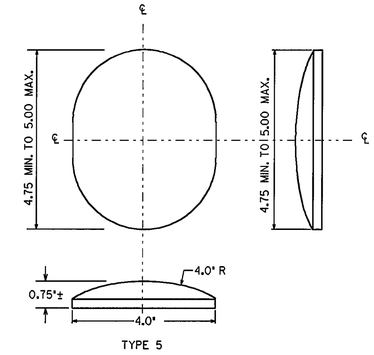

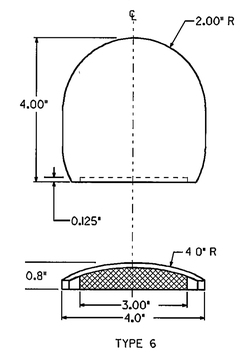

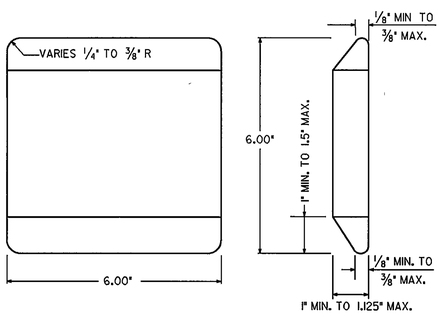

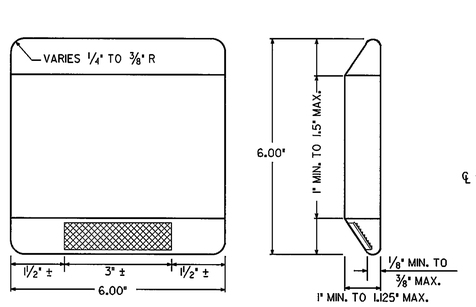

CERAMIC JIGGLE BAR MARKER

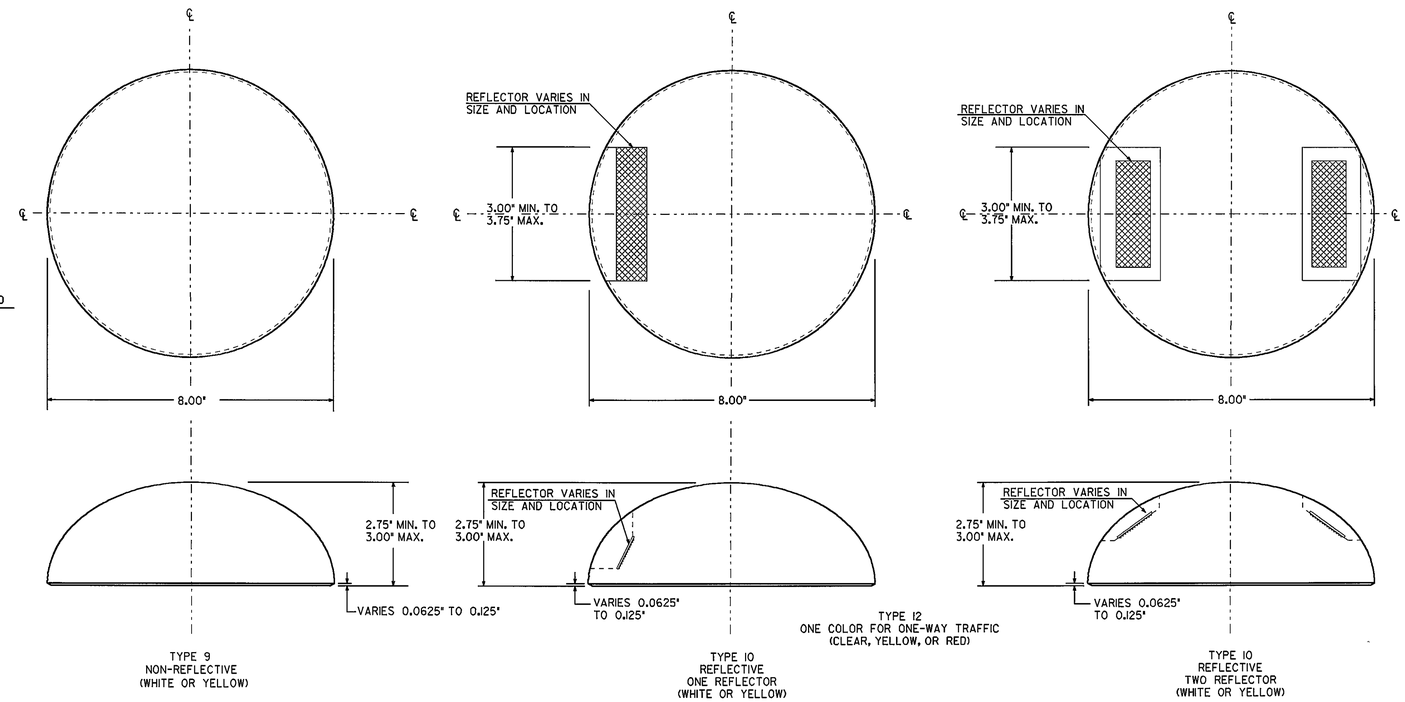

CERAMIC CHANNEL MARKER

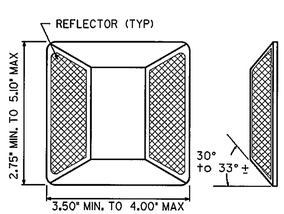

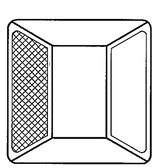

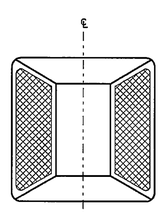

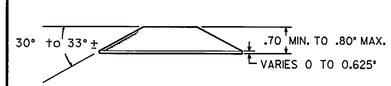

ALTERNATE RAISED REFLECTIVE MARKERS

GENERAL NOTES:

1. SPECIFICATIONS: GEORGIA STANDARD, CURRENT EDITION, AND SUPPLEMENTS THERE TO.
2. THE CONTRACTOR SHALL USE RAISED PAVEMNT MAKER SOURCES AS LISTED IN QPL 76.
3. COLORS FOR REFLECTIVE ELEMENTS SHALL BE EITHER CLEAR, YELLOW, OR RED AS SPECIFIED.
4. THE SHELL OF THE REFLECTIVE MARKERS SHALL BE OF ONE COLOR OR OF A COMBINATION OF TWO COLORS, WHICH SHALL BE THE SAME AS THE REFLECTIVE ELEMENT.
5. THE SURFACE OF OPAQUE CERAMIC MARKERS SHALL BE GLAZED AND OF THE COLOR SPECIFIED IN THE PLANS WITH A WHITE, VITREOUS, CERAMIC BASE.
6. COLORS FOR ALL RAISED PAVEMENT MARKERS SHALL BE AS SPECIFIED IN THE PLANS.

DATE	REVISIONS
9-22-11	REV. DIMENSIONS, ADDED
	NOTES TO MARKERS
	AND REV. GEN. NOTES.

GEORGIA DEPARTMENT OF TRANSPORTATION
OFFICE OF TRAFFIC SAFETY & DESIGN

DETAILS OF
RAISED PAVEMENT MARKERS

NO SCALE JANUARY 2000

PCPRSH

PCBDTB

9/22/2011 10:58:57 AM \\GDOT-DSN1\GDFLD1\OCF\GO_Rtp8000 ocf gowens v \GAR1\Raised Pavement Markings\t15c.prt