STATE	COUNTY	PROJECT NUMBER	SHEET NO.	TOTAL SHEETS
GA.				

PULLBOX TYPES 1, 2 AND 3

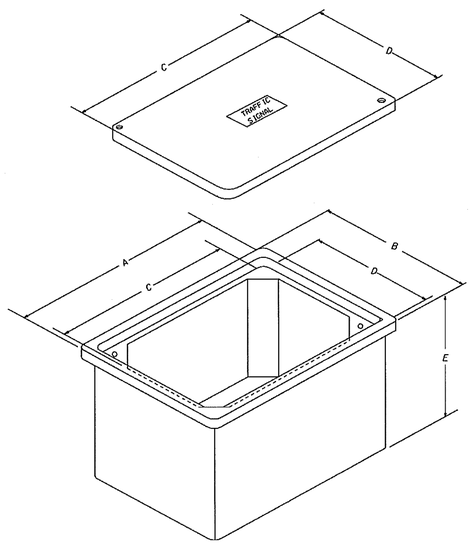

PULL BOX TYPE	* SIZE (IN.)				
	A	B	C	D	E
1	14	14	12	12	12
2	21	14	18	11	12
3	33	20	30	17	12
4S	38	26	36	24	18
4	38	26	36	24	36
5S	50	32	48	30	18
5	50	32	48	30	36
6	38	26	36	24	36
7	50	32	48	30	36

NOTES:
1. SIZES SHOWN ARE MINIMUM TRADE SIZES.
2. DIMENSIONS "C" AND "D" ARE MINIMUM REQUIREMENTS WITH A TOLERANCE OF NO MORE THAN (-.050 IN/ + 2 IN)
3. EXTEND COARSE GRAVEL 6" BEYOND BASE OF PULL BOX
4. PULL BOXES TYPE 4, 4S, 5, 5S, 6 & 7 SHALL HAVE 1" (DEGREE) FLARES FOR MAXIMUM STRENGTH
5. DESIGN PULL BOXES TO MEET OR EXCEED THE TIER LOADING SET FORTH IN SPECIFICATIONS 647.

Guidelines For Usage On Metric Projects

When these details are incorporated into plans and or projects that are being prepared or constructed in metric units, exact or precise conversion to metric units is not required. The dimensions shown that are in feet and inches may be converted to corresponding metric units using the following "Rounded-Off" conversion factors: 1"=25mm, 4"=100mm, and 12" or 1'=300mm. All measurement notes that refer to linear feet and square yards shall be interpreted to mean linear meters and square meters.

TYPE 4, 5, 4S, 5S, 6, AND 7 PULLBOX ASSEMBLIES

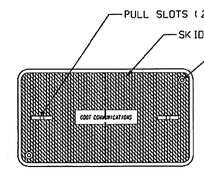

TOP VIEW

NOTE:
1. TYPE 5 AND TYPE 7 PULL BOXES SHALL HAVE SPLIT LID

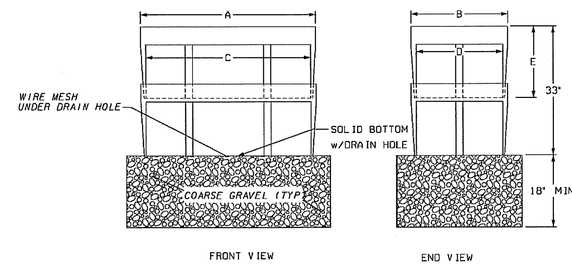

FRONT VIEW END VIEW

TYPE 4 AND 5 STACKABLE ASSEMBLY

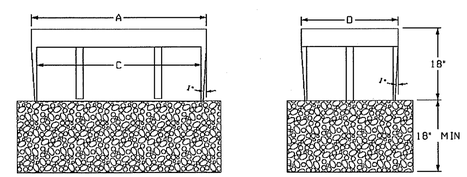

TYPE 4S AND 5S

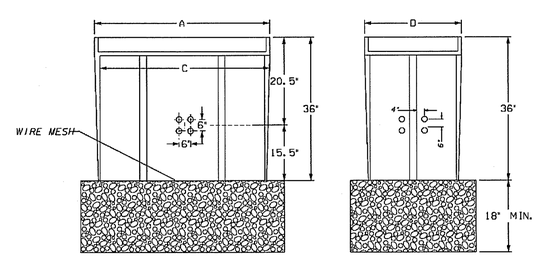

TYPE 6 AND 7

TYPICAL CONDUIT ENTRANCE DETAILS

TYPE 1,2,3,4S & 5S

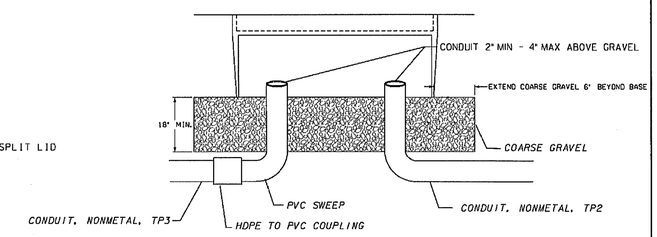

FIBER OPTIC CABLE MANAGEMENT IN TYPE 4,5,6 & 7 PULL BOX

N.T.S.

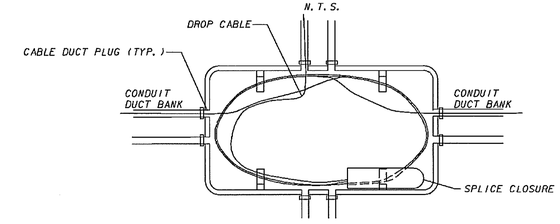

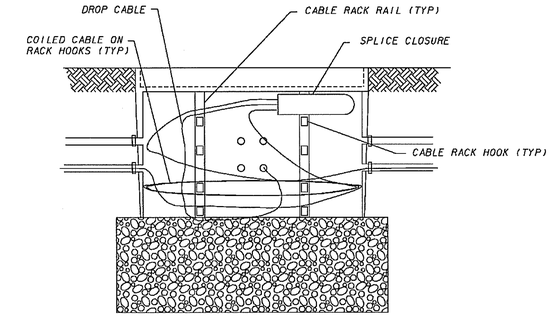

FIBER TRUNK AND DROP CABLE IN CLOSURE SHALL BE COILED TOGETHER. SEPARATE FIBER CABLES SHALL BE COILED SEPARATELY AND SUPPORTED ON SEPARATE RACK HOOKS.

DATE	REVISION	BY

DEPARTMENT OF TRANSPORTATION
STATE OF GEORGIA

TRAFFIC SIGNAL DETAIL

PULLBOX ASSEMBLY AND INSTALLATION

APRIL 2010
NOT TO SCALE REPORT DRAWING

DETAIL NUMBER
TS-02

GEORGIA
DEPARTMENT OF TRANSPORTATION

REVISION DATES

STATE OF GEORGIA
DEPARTMENT OF TRANSPORTATION
OFFICE: PROGRAM DELIVERY

0007406 8/07/12

DRAWING No.
TS-02

GPLN