STATE	COUNTY	PROJECT NUMBER	SHEET NO.	TOTAL SHEETS
GA.	HARALSON	CSSTP-0007-00(372)	55	63

SAG = .025 SPAN LENGTH
SPAN LENGTH = LONGEST DISTANCE BETWEEN ANY TWO SUPPORT POLES IN INSTALLATION.

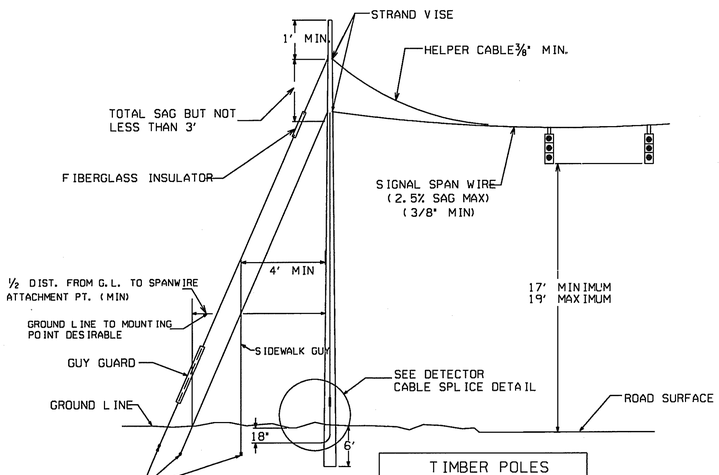

TIMBER POLES	
CLASS	CIRCUMFERENCE 6' FROM BUTT
I	41.0"
II	38.5"

TYP. TIMBER SIGNAL POLE DETAIL

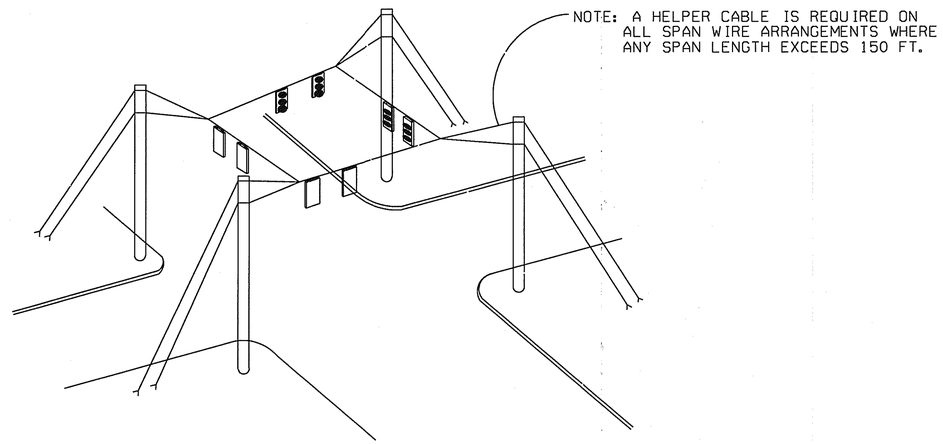

TYPICAL DETAIL "D"
SUSPENSION STRAND - PULL TOWARD POLE - LESS THAN 5 FEET

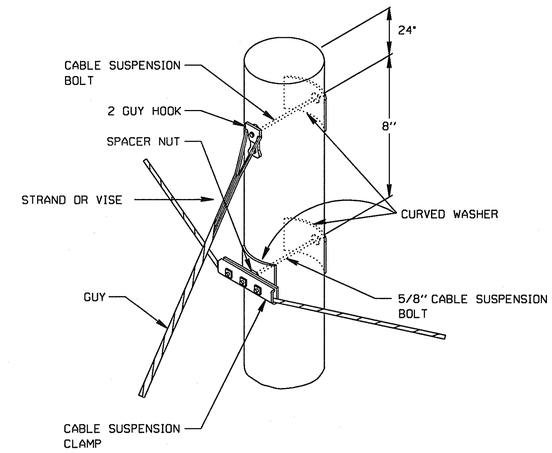

TYPICAL DETAIL "E"
SUSPENSION STRAND - PULL AWAY FROM POLE - 5 FEET OR MORE

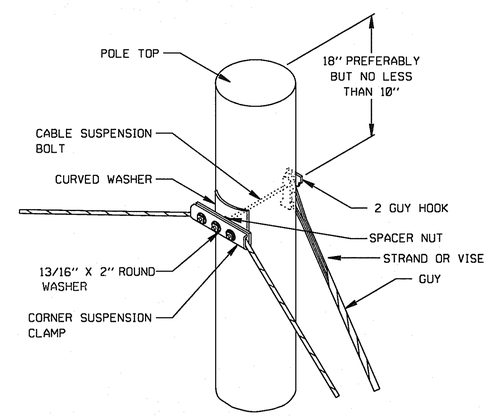

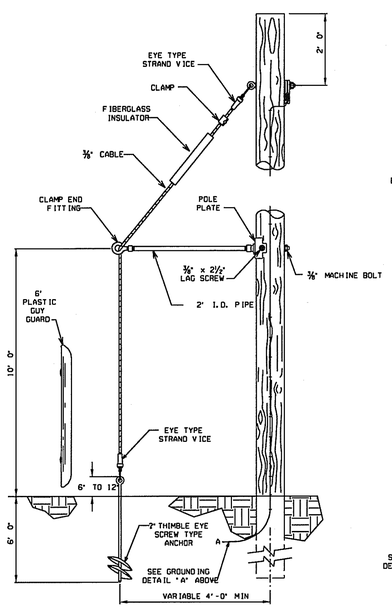

TYPICAL SIDEWALK GUY APPLICATION

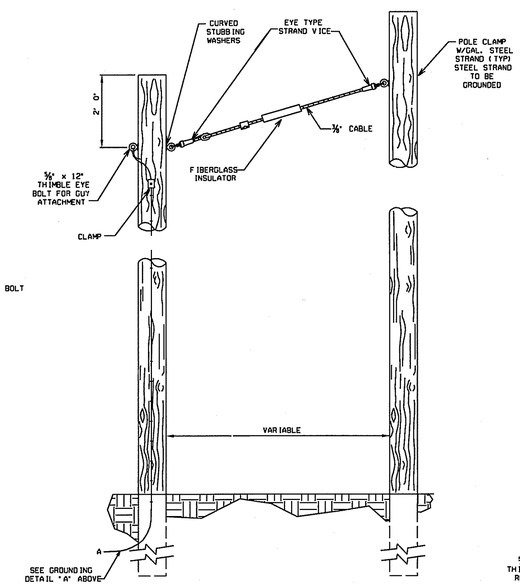

TYPICAL AERIAL GUY APPLICATION

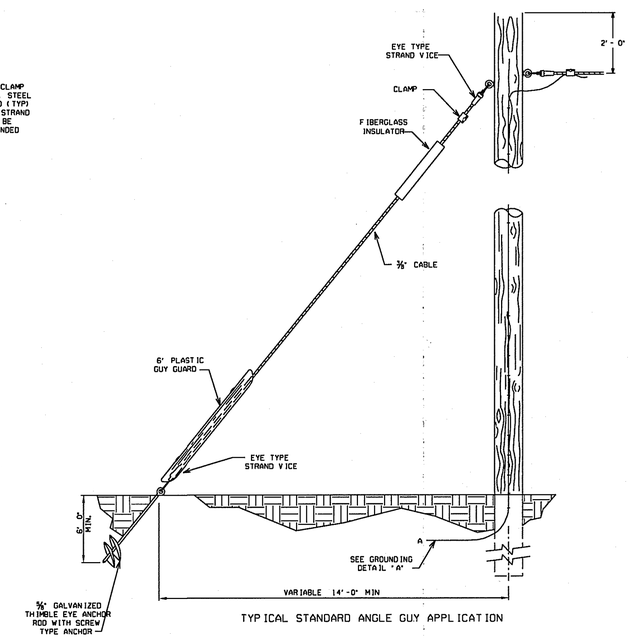

TYPICAL STANDARD ANGLE GUY APPLICATION

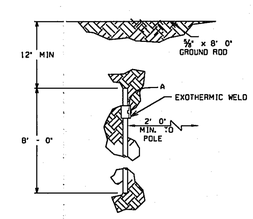

GROUNDING DETAIL "A"
(REQUIRED AT EACH POLE LOCATION)

Guidelines For Usage On Metric Projects

When these details are incorporated into plans and or projects that are being prepared or constructed in metric units, exact or precise conversion to metric units is not required. The dimensions shown that are in feet and inches may be converted to corresponding metric units using the following "Rounded-Off" conversion factors: 1"=25mm, 4"=100mm, and 12" or 1'=300mm. All measurement notes that refer to linear feet and square yards shall be interpreted to mean linear meters and square meters.

REV.	BY	REVISION DESCRIPTION	DATE

DEPARTMENT OF TRANSPORTATION
STATE OF GEORGIA

TRAFFIC SIGNAL DETAIL

STANDARD GUYING DETAILS

APRIL 2010
NOT TO SCALE - REPORT ERRORS

DETAIL NUMBER
TS-09