STATE	PROJECT NUMBER	SHEET NO.	TOTAL SHEETS
GA.	CSSTP-007-00(370)	74	77

DETAILS OF RIGHT OF WAY MARKERS

NOTE: R/W MARKERS MAY BE EITHER CONCRETE OR GRANITE. ALL MARKERS SHALL BE PLACED AS DIRECTED BY THE ENGINEER.

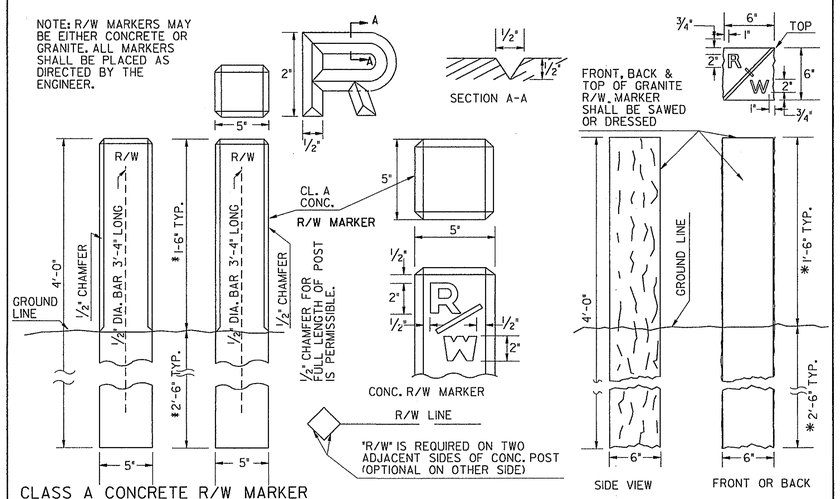

CLASS A CONCRETE R/W MARKER

(ALTERNATE) GRANITE R/W MARKER

* NOTE: WHERE DIRECTED BY THE ENGINEER, THE ABOVE GROUND HEIGHT OF ANY R/W MARKER SHALL BE REDUCED BY INCREASING THE DEPTH AS NEEDED WITH NO ADDITIONAL PAYMENT.

BY	REVISION	DATE
G.L.O.	REDRAWN TO MATCH METRIC	4-10-06
	GA. STD. 9003	
G.J.P.	REDRAWN	6-30-98
R.M.U.	REV. F.A.P. - SP. POST ALT.	9-28-90
R.M.U.	VAR. HT. R/W MARKER	10-11-88
R.M.U.	ADD GRANITE R/W M.	5-24-85

DEPARTMENT OF TRANSPORTATION
STATE OF GEORGIA

STANDARD
DETAILS OF MARKERS
FEDERAL AID AND STATE
RIGHT OF WAY MARKERS

NO SCALE — REV. & REDR. DEC., 1981

DES. ____
DRW. R.M.U.
TRA. G.M.E.
CHK. R.K.C.

(SUBMITTED) STATE ROAD & AIRPORT DESIGN ENGINEER
(APPROVED) CHIEF ENGINEER

NUMBER 9003