STATE	PROJECT NUMBER	SHEET NO.	TOTAL SHEETS
GA.	CSSTP-0007-00(368)	79	91

TEMPORARY SILT FENCE DETAILS

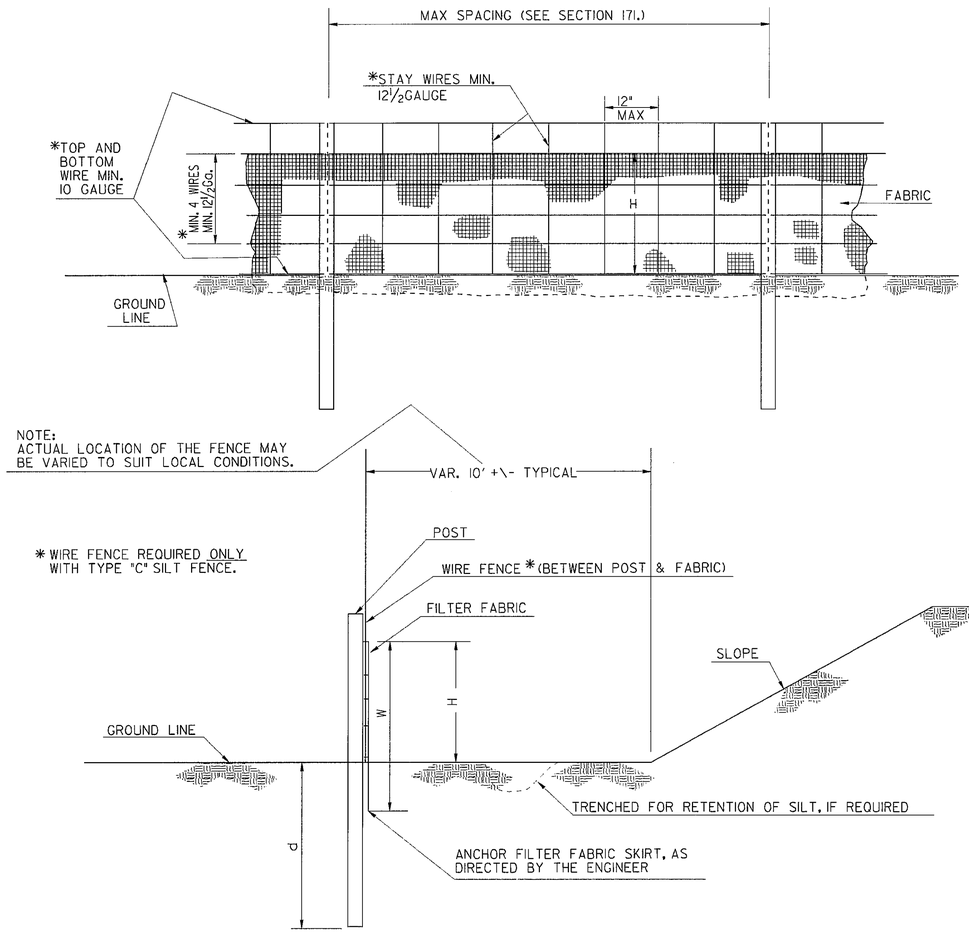

ELEVATION

TEMPORARY SILT FENCES ARE FOR USE WHERE IT HAS BEEN DETERMINED THAT BALED STRAW EROSION CHECKS ARE INADEQUATE OR THAT SILT FENCES CAN BE JUSTIFIED ON A COST EFFECTIVE BASIS.

TEMPORARY SILT FENCES ARE NOT TO BE CONFUSED WITH SILT RETENTION BARRIERS.

SEE SECTION 171 FOR SILT FENCE SPECIFICATIONS.

FENCE TYPE	POST LENGTH	H	D	W	TYPICAL USES
TYPE "A"	4 FT.	2'-2"	1'-6"	3'-0"	WHERE FILL EXEEDS 10 FT. HEIGHT;
TYPE "B"	3 FT.	1'-4"±	1'-6"	1'-10"	WHERE FILL HEIGHTS ARE UNDER 10 FT.;
TYPE "C"	4 FT.	2'-2"	1'-6"	3'-0"	& AT BRIDGE END ROLLS, DITCH CHECKS, & AT GRADES OVER 8% AT 25 FT. SPACING.

(SEE SHEET 2 OF 2 FOR ADDITIONAL APPLICATIONS.)

BALED STRAW EROSION CHECK DETAILS

BALED STRAW ON FILL SLOPE

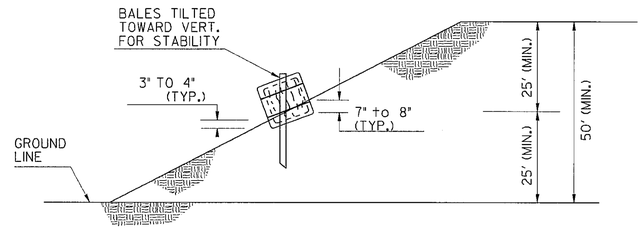

ELEVATION

(ONE ROW OF BALES SHOWN-2 OR MORE MAY BE SPECIFIED)

NOTE: FOR BALED STRAW OR SILT FENCE AT TOE OF SLOPE, SEE DETAILS AT LEFT OR RIGHT AND ALSO SHEET 2 OF 2.

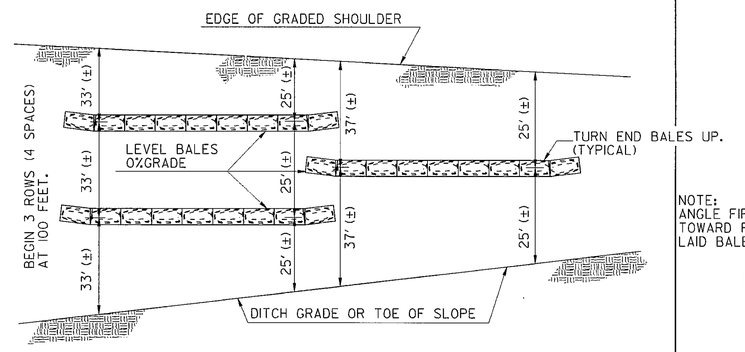

LONGITUDINAL VIEW

(DIMENSIONS ARE MEASURED VERTICALLY.)

BALED STRAW AT TOE OF SLOPE

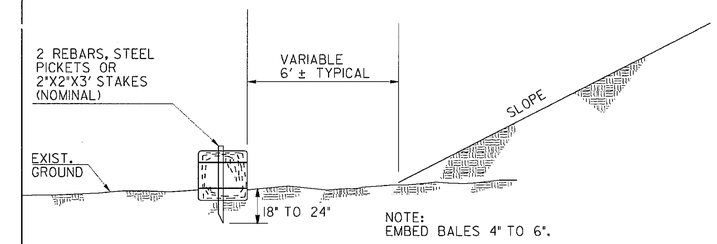

ELEVATION

NOTE: THE 6' ± OFFSET MAY BE VARIED TO SUIT LOCAL CONDITIONS.

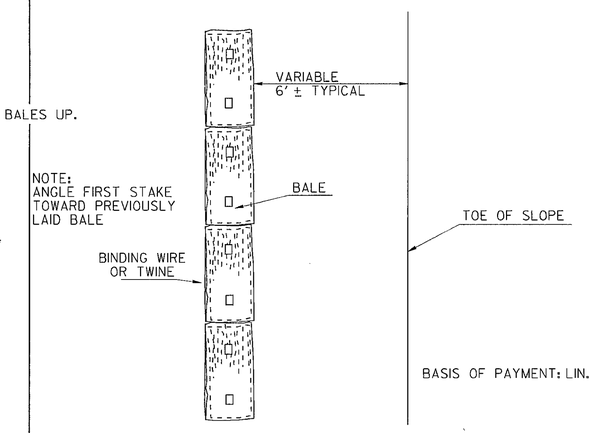

PLAN

NOTE:
BALED STRAW IS USED IN TYPICAL RURAL AREAS WHERE FILLS ARE FROM 5 FT. TO 10 FT. HIGH, FOR DITCH CHECKS, AND AS SPECIFIED ELSEWHERE. (See Sh. 2 of 2)

SYNTHETIC HAY BALES OF TYPE WHICH HAVE BEEN CLASSIFIED AS "ACCEPTED" BY THE D.O.T. OFFICE OF MATERIALS & RESEARCH MAY BE USED AS AN ALTERNATE TO BALED STRAW AS APPROVED BY THE ENGINEER.

BRUSH BARRIER DETAILS

(FOR USE IN RURAL AREAS)

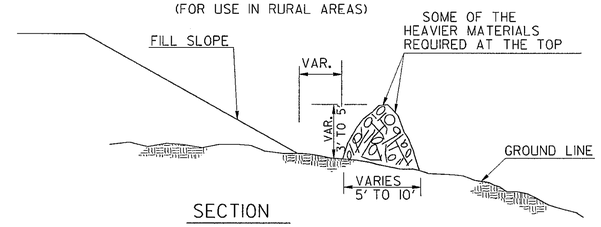

SECTION

NOTE: INTERMINGLE BRUSH, LOGS, ETC. SO AS NOT TO FORM A SOLID DAM.

FRONT VIEW

NOTE: BRUSH BARRIER(S) WILL BE INCLUDED IN PAYMENT FOR CLEARING & GRUBBING.

BY	REV. & REDR. REVISION	9-01 DATE

TEMPORARY SILT FENCE
BALED STRAW EROSION CHECK
BRUSH BARRIER DETAILS

(SHEET 1 OF 2)

D-24(a)