PEDESTRIAN SIGNS

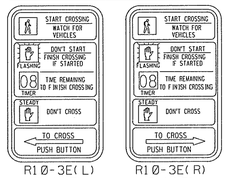

R10-3E(L) 9" X 15" R10-3E(R) 9" X 15"

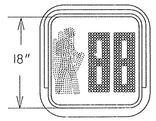

P2, P4, P6, P8

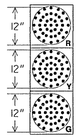

2, 4, 6, 8

PHASING DIAGRAM

Ø1 NOT USED	Ø2 W W	Ø3 NOT USED	Ø4 W W
Ø5 NOT USED	Ø6 W W	Ø7 NOT USED	Ø8 W W

W Central Ave
D-SPEC #9
2 EA

5th St SW
D-SPEC #14
1 EA

5th St NW
D-SPEC #16
1 EA

5th St SW
D-SPEC #15
1 EA

5th St NW
D-SPEC #17
1 EA

N

NOTE: PLACE RAISED PVMT MARKERS ACCORDING TO DETAIL T-15A

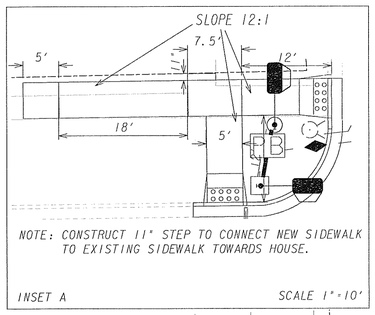

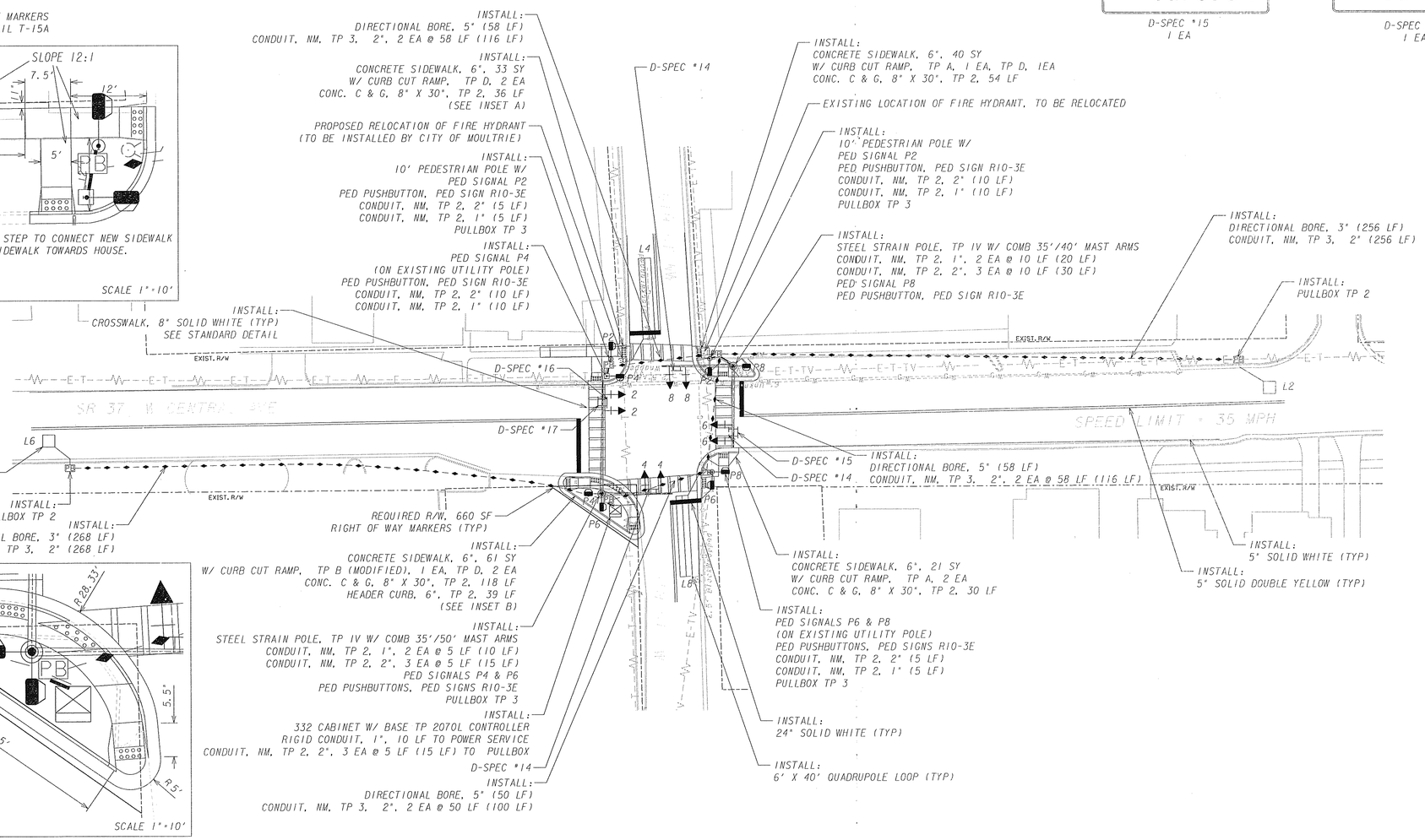

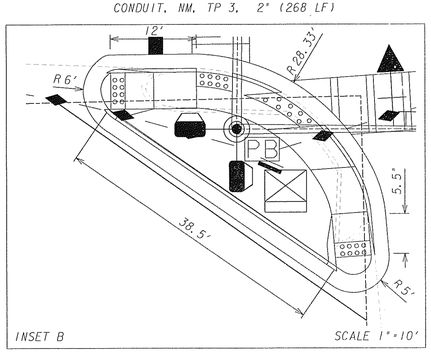

SR 37 (W. CENTRAL AVE) & 5TH ST W.

DESIGNED BY: CS	CHECKED BY: MA	DATE: -----
	REVIEWED BY: VW	DATE: -----

ITERIS®

SCALE IN FEET
0 30 60 120

REVISION DATES

STATE OF GEORGIA
DEPARTMENT OF TRANSPORTATION
OFFICE: TRAFFIC OPERATIONS

CONSTRUCTION/INSTALLATION PLAN

INTERSECTION NO. 5

DRAWING NO. 27-15

GPLN