COUNTY	PROJECT NUMBER	SHEET NO.	TOTAL SHEETS
BARROW	CSSTP-0007-00(356)	13	67

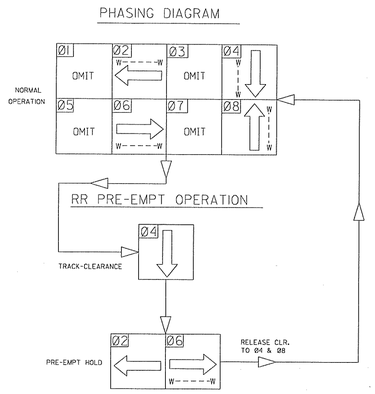

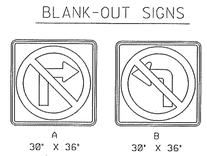

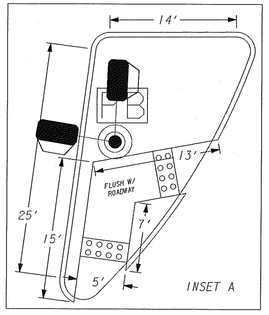

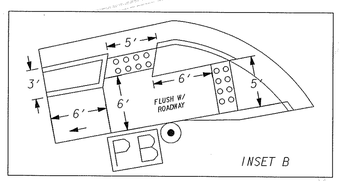

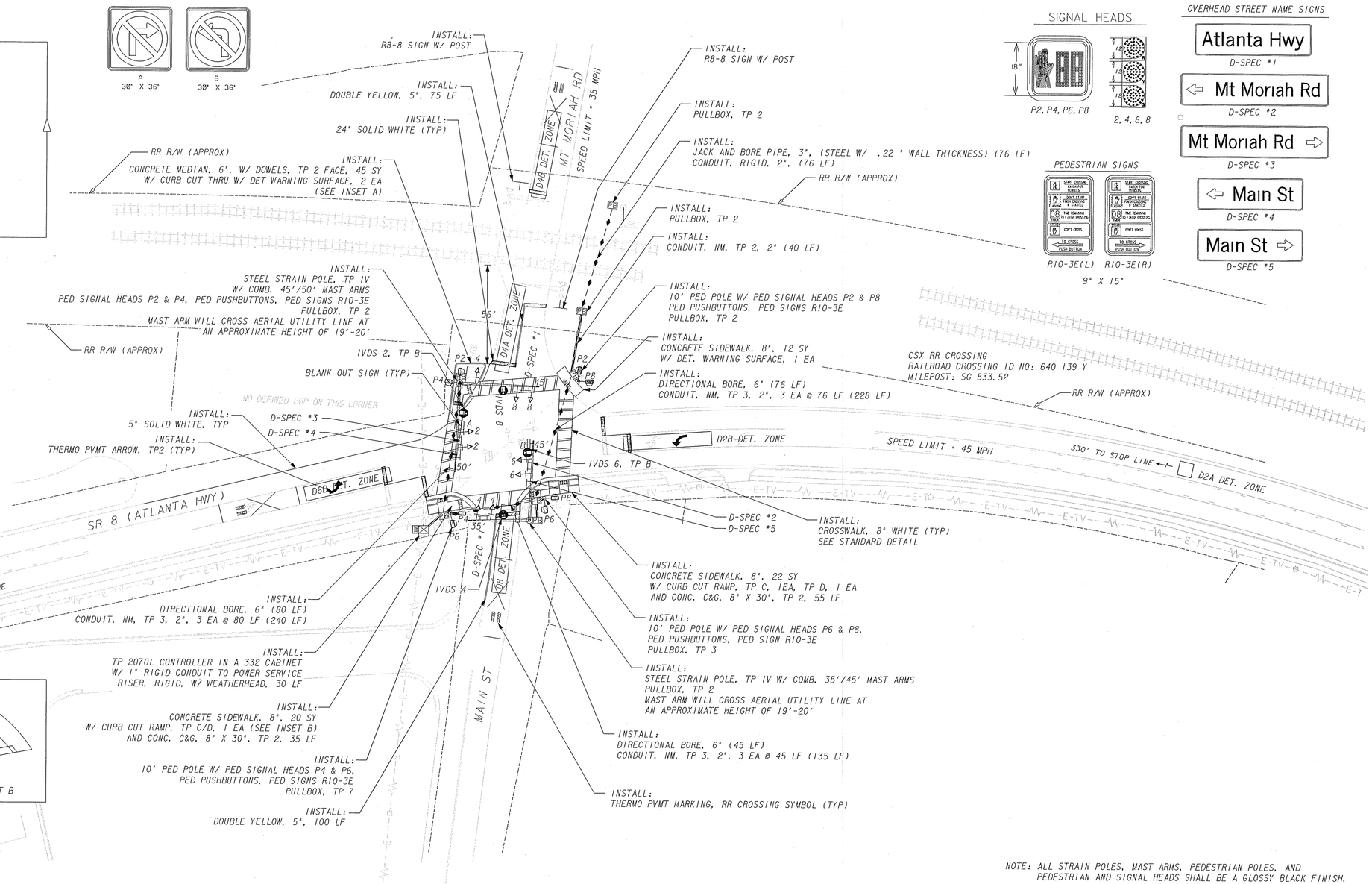

NOTE: ALL STRAIN POLES, MAST ARMS, PEDESTRIAN POLES, AND PEDESTRIAN AND SIGNAL HEADS SHALL BE A GLOSSY BLACK FINISH.

SR 8 (ATLANTA HWY)
&
MT MORIAH RD/ MAIN ST

$DESIGNED BY$	$CHECKED BY$	$DATE 1$
	$REVIEWED BY$	$DATE 2$

ITERIS

SCALE IN FEET
0 30 60 120

REVISION DATES		
6-3-10		

STATE OF GEORGIA
DEPARTMENT OF TRANSPORTATION
OFFICE: TRAFFIC OPERATIONS

CONSTRUCTION/INSTALLATION PLAN
TRAFFIC SIGNAL
INSTALLATION NO. 1

DRAWING No.
27-3

...9\640\dgn\Files\0007356\001.dgn 6/30/2010 8:25:49 AM sgibbs