STP-0003-00(406) 00 00

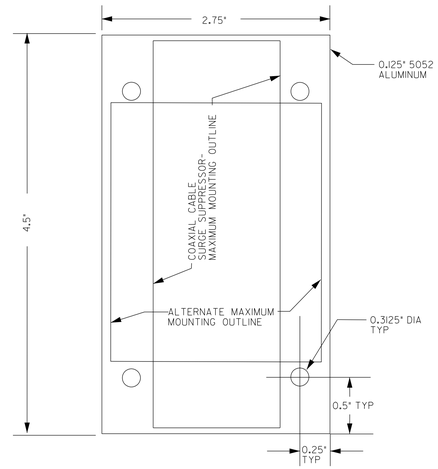

ALL DIMENSIONS +- 0.05" TOLERANCE

COAXIAL CABLE SURGE SUPPRESSOR MOUNTING PLATE

NTS

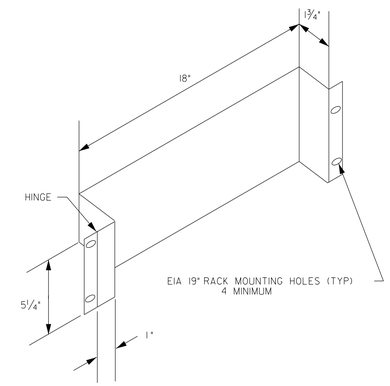

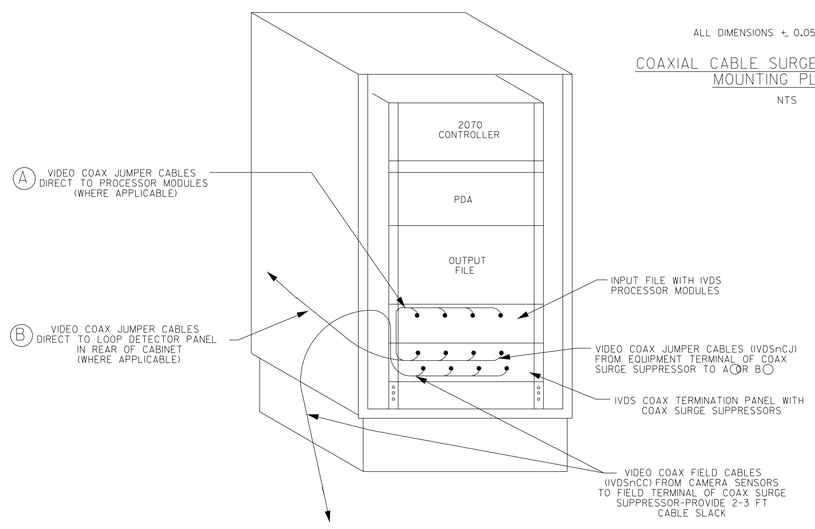

332 OR 336S CABINET-FRONT VIEW

NTS

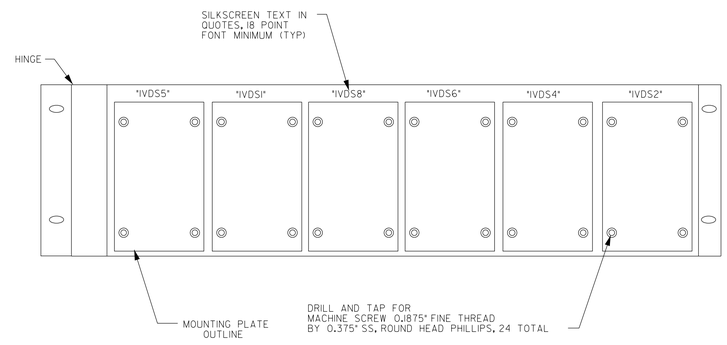

NOTE: FURNISH 6 MOUNTING PLATES AND 24 MOUNTING PLATE SCREWS WITH EACH PANEL

COAXIAL TERMINATION PANEL-332 OR 336S CABINET

NTS

ARCADIS

Infrastructure, environment, buildings

REVISION DATES		

STATE OF GEORGIA
DEPARTMENT OF TRANSPORTATION

OFFICE: PROGRAM DELIVERY

COAX TERMINATION PANEL (04/2001)

DRAWING No. NAV052

6/20/2011 GPLN