STATE	COUNTY	PROJECT NUMBER	SHEET NO.	TOTAL SHEETS
GA.	HENRY/BUTTS	CSSTP-0007-00(347)	63	72

AERIAL BUTT SPLICE DETAIL

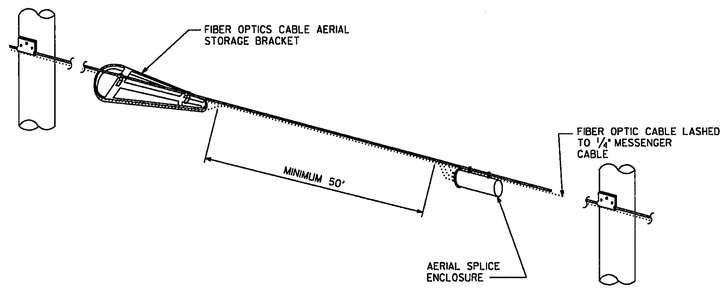

AERIAL SLACK LOOP DETAIL

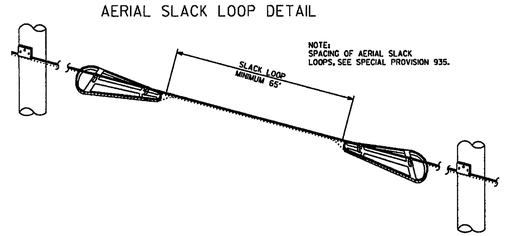

AERIAL DROP DETAIL

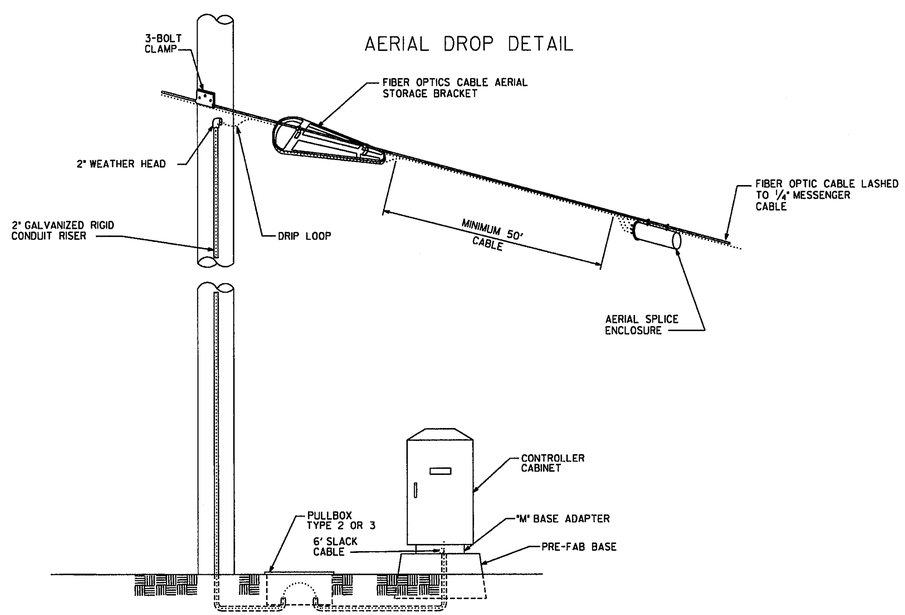

FIBER OPTIC DETAIL DROP - CABLE TERMINATION IN CONTROL CABINET MODEL 332 - MASTER SYSTEM

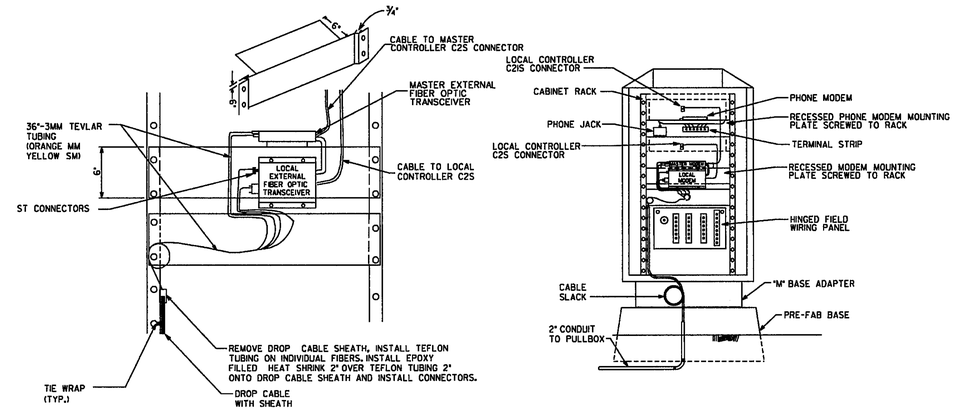

FIBER OPTIC DETAIL DROP-CABLE TERMINATION IN CONTROL CABINET - MODEL 332 LOCAL SYSTEM

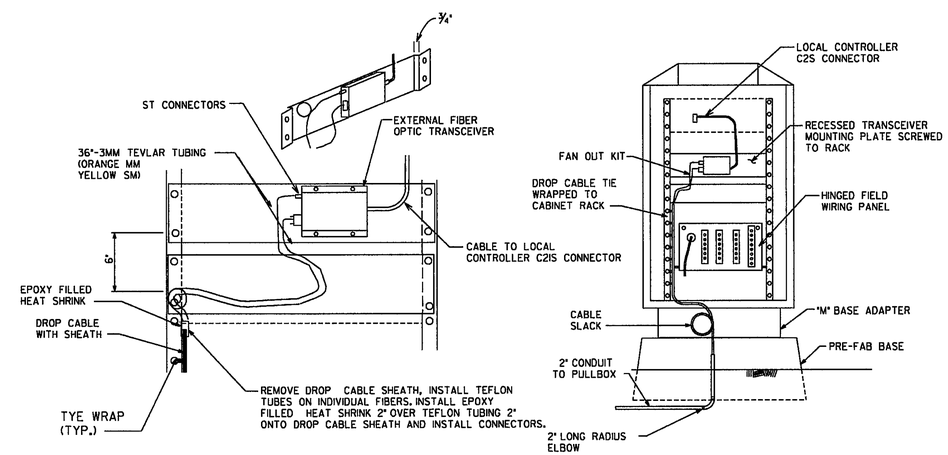

REV. BY:	REVISION DESCRIPTION	DATE

DEPARTMENT OF TRANSPORTATION
STATE OF GEORGIA

TRAFFIC SIGNAL DETAIL

FIBER OPTICS DETAILS
1 OF 2

APRIL 2010
NOT TO SCALE - REPORT ERRORS

DETAIL NUMBER
TS-10