AERIAL BUTT SPLICE DETAIL

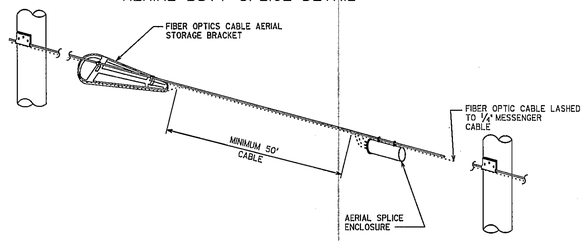

AERIAL SLACK LOOP DETAIL

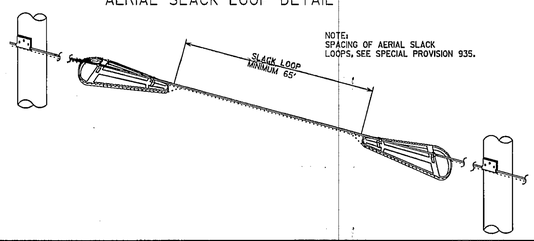

AERIAL DROP DETAIL

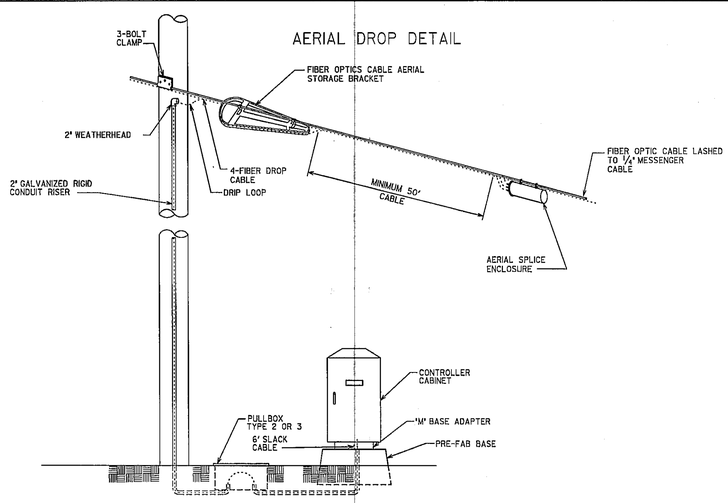

FIBER OPTIC DETAIL DROP - CABLE TERMINATION IN CONTROL CABINET MODEL 332 - MASTER SYSTEM

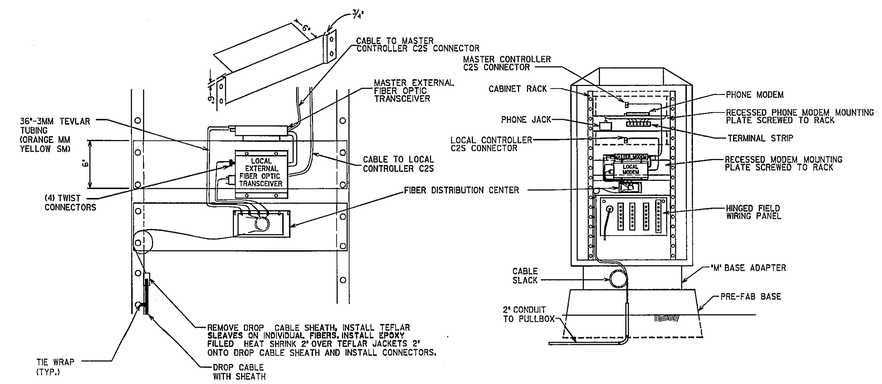

FIBER OPTIC DETAIL DROP-CABLE TERMINATION IN CONTROL CABINET - MODEL 332 LOCAL SYSTEM

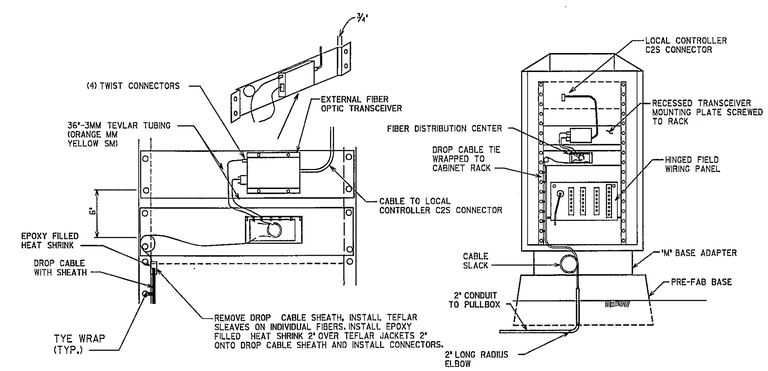

GEORGIA
DEPARTMENT OF TRANSPORTATION

-NO SCALE-

REVISION DATES		
11/01/2000		
11/01/2000		
12/18/2001		

STATE OF GEORGIA
DEPARTMENT OF TRANSPORTATION
OFFICE: TRAFFIC OPERATIONS
SIGNAL PLANS

FIBER OPTIC DETAILS
SHEET 1 OF 2
DECEMBER 2001

DRAWING No. TS-10

3/1/2007 GPLN