COUNTY	PROJECT NUMBER	SHEET NO.	TOTAL SHEETS
NEWTON	STP00-0007-00(339)	57	162

PULLBOX DIMENSIONS

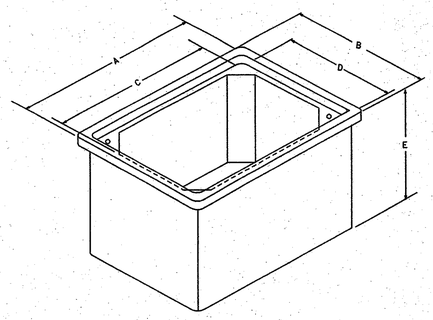

PULL BOX TYPE	* SIZE (IN.)				
	A	B	C	D	E
1	14	14	12	12	12
2	21	14	18	11	12
3	33	20	30	17	12
4S	38	26	36	24	18
4	38	26	36	24	36
5S	50	32	48	30	18
5	50	32	48	30	36
6	38	26	36	24	36
7	50	32	48	30	36

* SIZES SHOWN ARE MINIMUM TRADE SIZES. DIMENSIONS C AND D ARE MINIMUM REQUIREMENTS WITH A TOLERANCE OF NO MORE THAN - 0.50 IN/+2.0 IN.

TYPE 4, 5, 4S, 5S, 6, AND 7 PULLBOX ASSEMBLIES

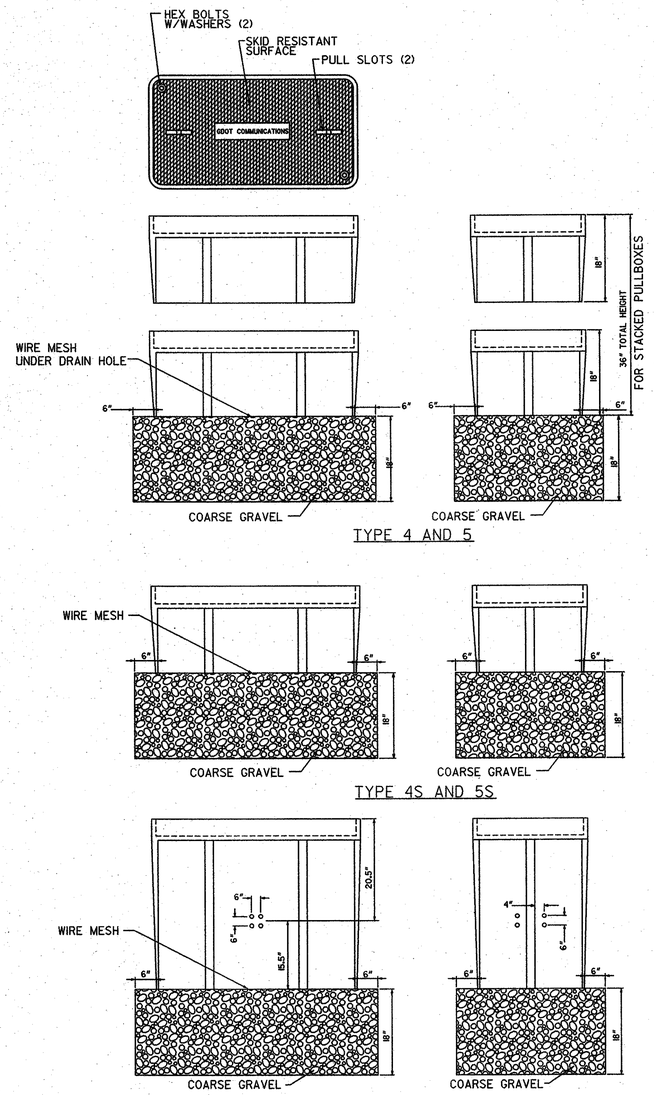

TYPICAL CONDUIT ENTRANCE DETAILS
TYPE 1,2,3,4S & 5S

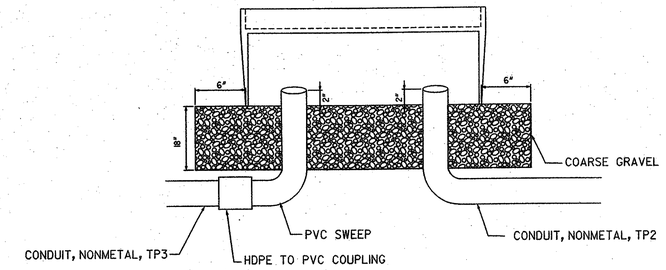

FIBER OPTIC CABLE MANAGEMENT IN TYPE 4,5,6 & 7 PULL BOX

N.T.S.

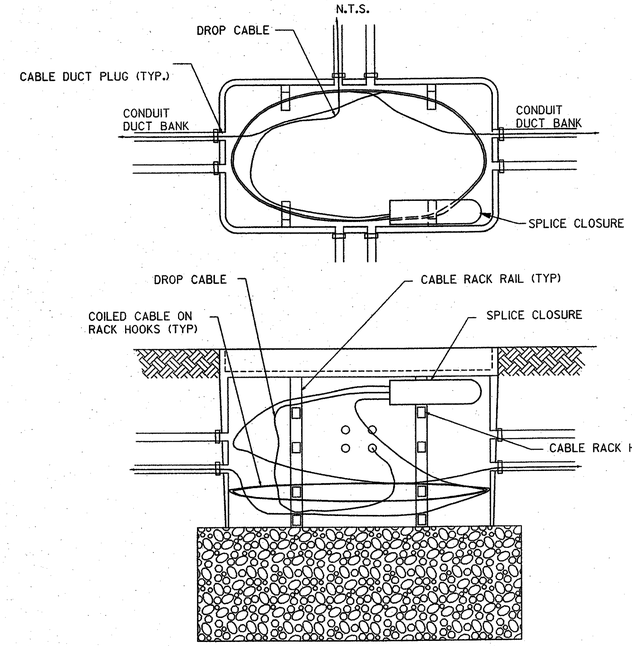

FIBER TRUNK AND DROP CABLE IN CLOSURE SHALL BE COILED TOGETHER. SEPARATE FIBER CABLES SHALL BE COILED SEPARATELY AND SUPPORTED ON SEPARATE RACK HOOKS.

Guidelines For Usage On Metric Projects

When these details are incorporated into plans and or projects that are being prepared or constructed in metric units, exact or precise conversion to metric units is not required. The dimensions shown that are in feet and inches may be converted to corresponding metric units using the following "Rounded-Off" conversion factors: 1" =25mm, 4"=100mm, and 12" or 1' =300mm. All measurement notes that refer to linear feet and square yards shall be interpreted to mean linear meters and square meters.

GEORGIA
DEPARTMENT OF TRANSPORTATION

NOT TO SCALE

REVISION DATES
11/02/2000
07/27/2004
08/11/2006

STATE OF GEORGIA
DEPARTMENT OF TRANSPORTATION
OFFICE: TRAFFIC SAFETY & DESIGN

SIGNAL DETAILS

PULL BOX ASSEMBLY AND INSTALLATION

DRAWING No. TS-02

PULLBOXES.dgn 10/12/2006 10:24:34 AM