| STATE | PROJECT NUMBER | SHEET NO. | TOTAL SHEETS |
|---|---|---|---|
| GA. | CSSTP-0001-00(307) | 85 | 158 |

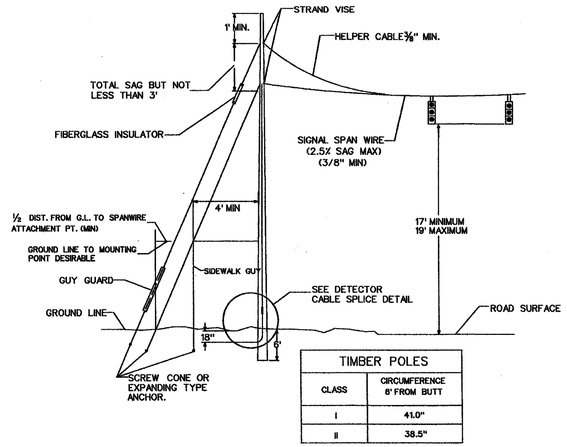


| TIMBER POLES | |
|---|---|
| CLASS | CIRCUMFERENCE 8' FROM BUTT |
| I | 41.0" |
| II | 38.5" |

TYP. TIMBER SIGNAL POLE DETAIL

SAG = .025 SPAN LENGTH
SPAN LENGTH = LONGEST DISTANCE BETWEEN ANY TWO SUPPORT POLES IN INSTALLATION.

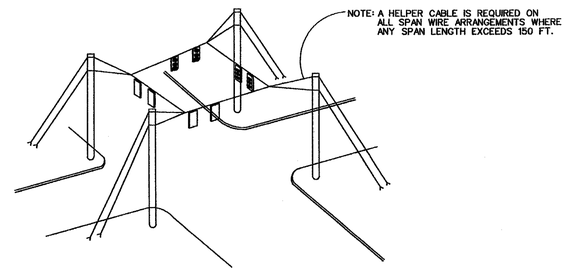


TYPICAL DETAIL "D"
SUSPENSION STRAND - PULL TOWARD POLE - LESS THAN 5 FEET

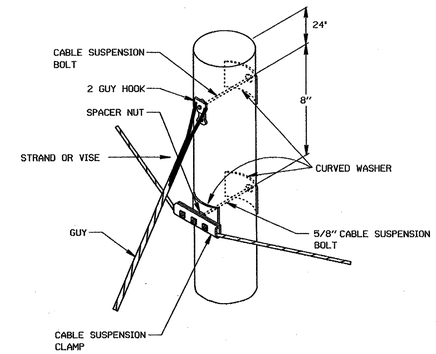


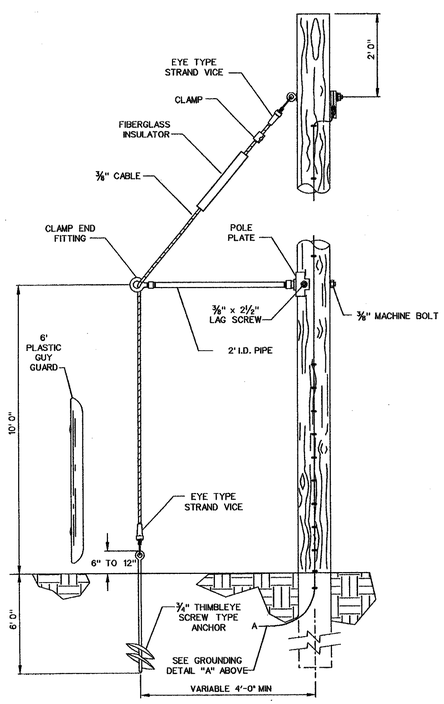


TYPICAL SIDEWALK GUY APPLICATION

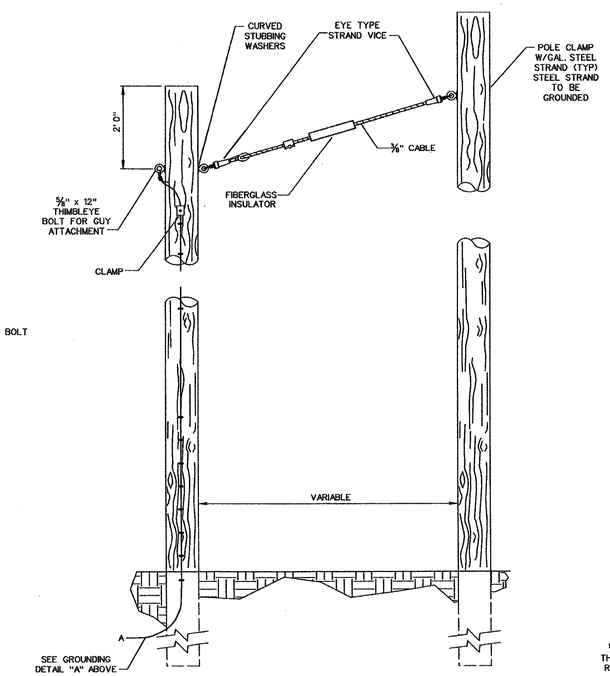


TYPICAL AERIAL GUY APPLICATION




GROUNDING DETAIL "A"
(REQUIRED AT EACH POLE LOCATION)

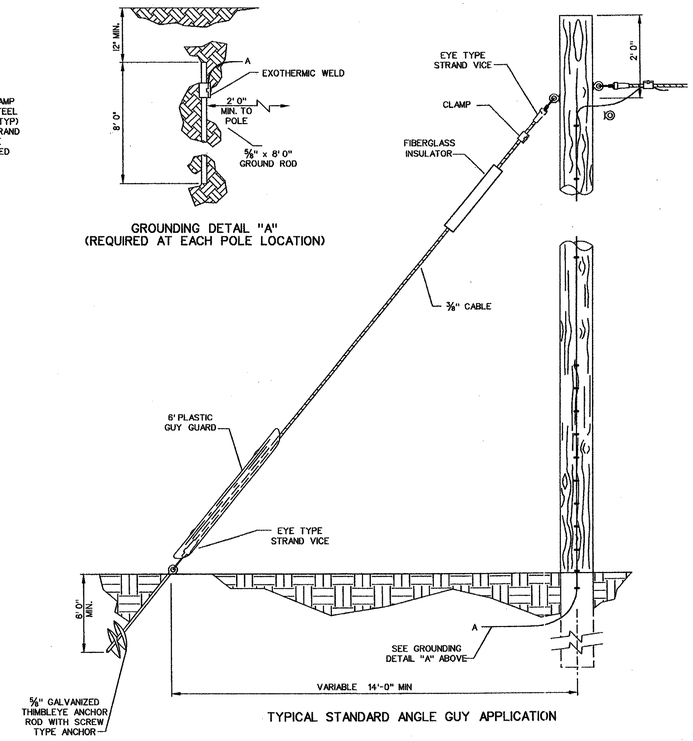


TYPICAL STANDARD ANGLE GUY APPLICATION

TYPICAL DETAIL "E"
SUSPENSION STRAND - PULL AWAY FROM POLE - 5 FEET OR MORE

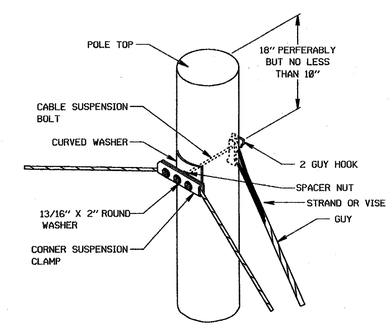


| DATE | REVISIONS |
|---|---|
| | |

GEORGIA DEPARTMENT OF TRANSPORTATION
OFFICE OF TRAFFIC SAFETY & DESIGN

STANDARD GUYING DETAILS

NO SCALE — DECEMBER 1998



PCBDTB