STATE	PROJECT NUMBER	SHEET NO.	TOTAL SHEETS
GA.	CSSTP-0007-00(307)	77	138

INDUCTIVE LOOP VEHICLE DETECTOR DETAILS

USING STRANDED COPPER WIRE

PLAN VIEW OF STANDARD LOOP SAW CUTS

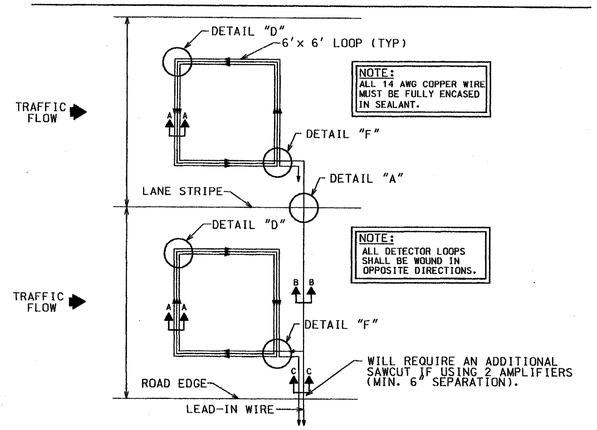

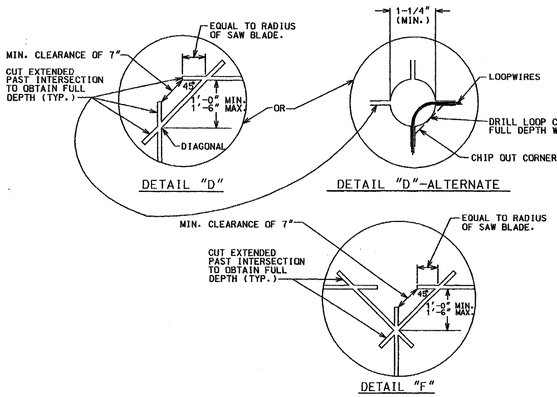

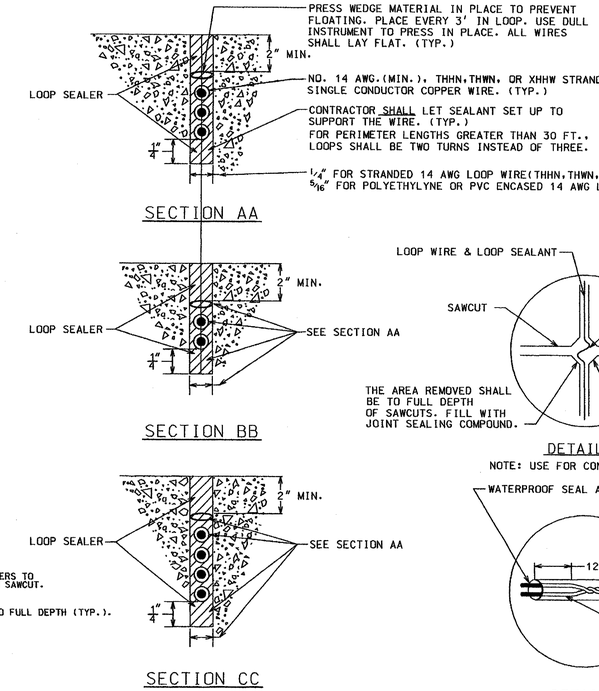

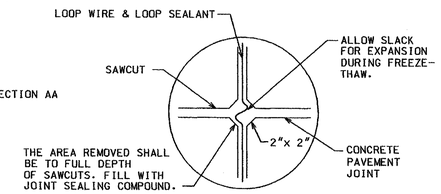

DETAIL "A"

NOTE: USE FOR CONCRETE PAVEMENT ONLY.

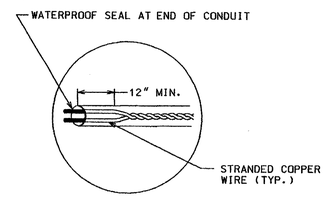

DETAIL "E"

TYPICAL CURB DETAIL

(WITH SIDEWALK)

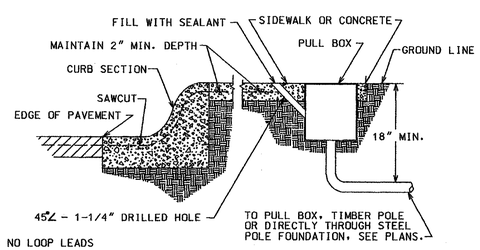

NOTE: NO LOOP LEADS THROUGH TURNING RADIUS

TYPICAL CURB DETAIL

(WITHOUT SIDEWALK)

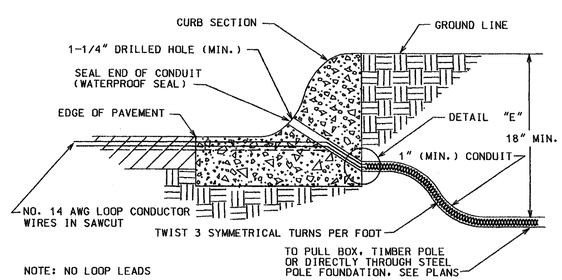

NOTE: NO LOOP LEADS THROUGH TURNING RADIUS

PLAN VIEW OF QUADRUPOLE

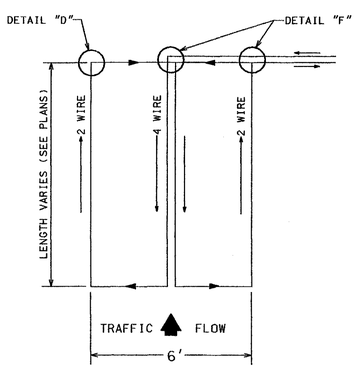

NO SCALE

LOOP WIRE CONFIGURATION

THE DOUBLE LAYER CONFIGURATION (2-4-2) SHOWN IS A MINIMUM DESIGN FOR NORMAL INSTALLATIONS WHEN REQUIRED BY THE PLANS.

PLAN VIEW OF STANDARD LOOP

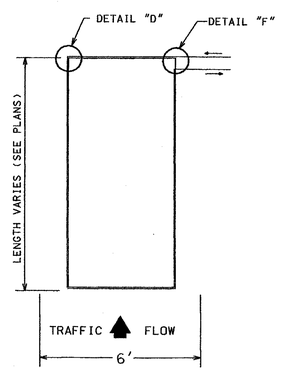

NO SCALE

LOOP WIRE CONFIGURATION

THE DOUBLE LAYER CONFIGURATION (2-2) SHOWN IS A MINIMUM DESIGN FOR NORMAL INSTALLATIONS WHEN REQUIRED BY THE PLANS.

PULL BOX-SPLICE DETAILS

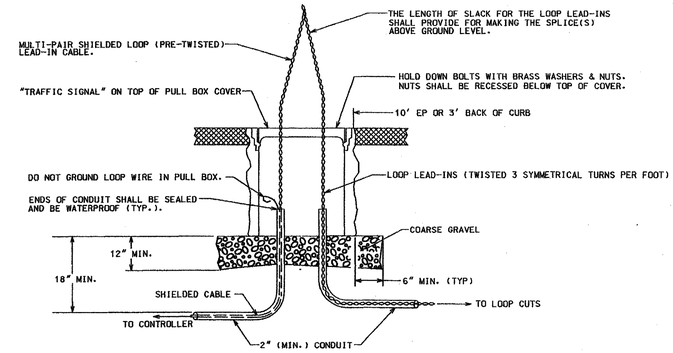

SPLICE DETAILS

ALTERNATE #1

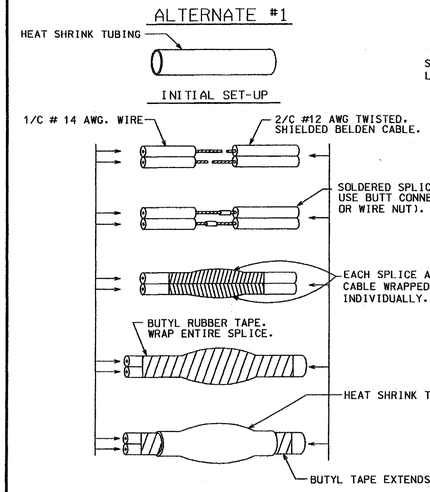

ALTERNATE #2

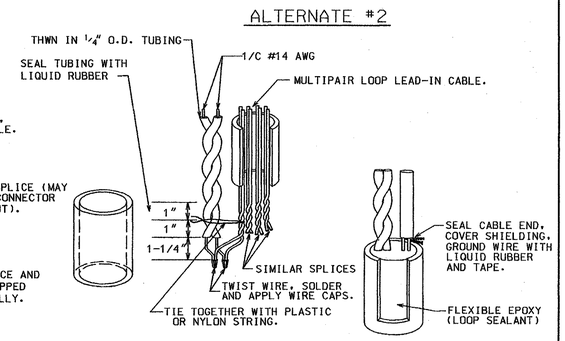

FINISHED SPLICE

NOTE:
FINISHED SPLICE MUST BE WATERPROOF.

DETAIL WHERE NO CURB EXISTS

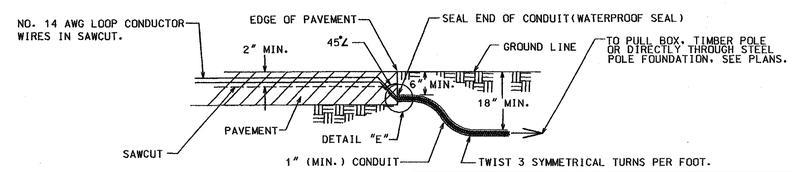

NOTE: NO LOOP LEADS THROUGH TURNING RADIUS

DATE	REVISIONS
1/30/04	ADDED DETAIL "F"

GEORGIA DEPARTMENT OF TRANSPORTATION
OFFICE OF TRAFFIC SAFETY & DESIGN

LOOP DETECTOR INSTALLATION DETAIL

NO SCALE DECEMBER 1998

TS-01