AF 21868

STATE	PROJECT NUMBER	SHEET NO.	TOTAL SHEETS
GA.	CSSTP-0007-00(143)	152	213

CATCH BASIN (IF CATCH BASIN HAS LONGITUDINAL PIPE OVER 24", SEE DETAILS AT RIGHT.)

NOTE: OPENING FOR PIPE SHALL BE THE OUTSIDE DIAMETER OF THE REQUIRED PIPE PLUS 1" MINIMUM OPENING SHALL HAVE CORRUGATIONS.

5 - #3 BARS @ 3" CENTERED OVER PEDESTAL LENGTH W_1+4'-8"

NOTE FOR ALL CATCH BASINS

1/2" EXPANSION JOINT MATERIAL SHALL BE PLACED AROUND THE CATCH BASIN WHERE SIDEWALK OR MEDIAN PAVEMENT IS PLACED ADJACENT TO THE CATCH BASIN.

5 - #3 BARS @ 3" CENTERED OVER PEDESTAL LENGTH 2'-10½".

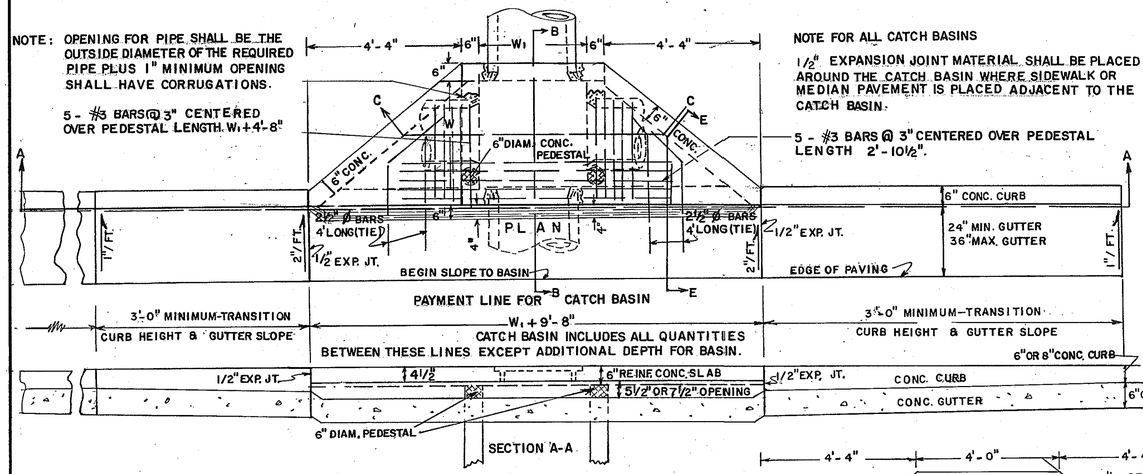

CATCH BASIN (TYPICAL FOR CATCH BASIN WITH LONGITUDINAL PIPE OVER 24".)

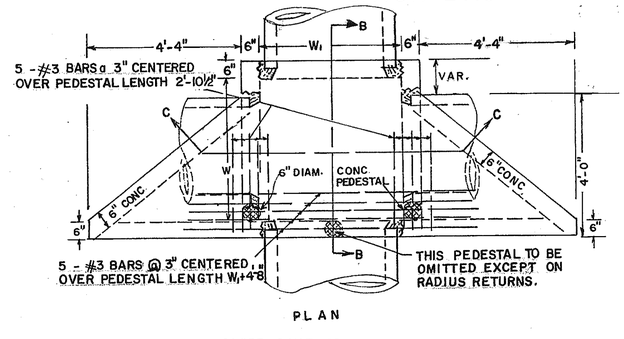

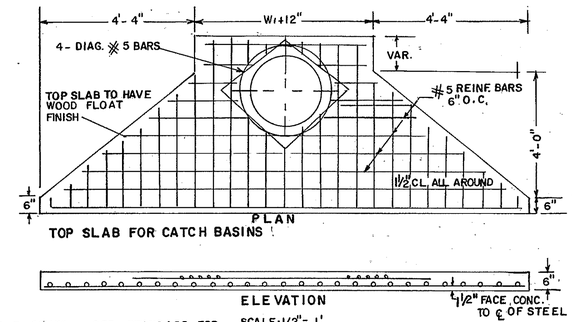

TOP SLAB FOR CATCH BASINS

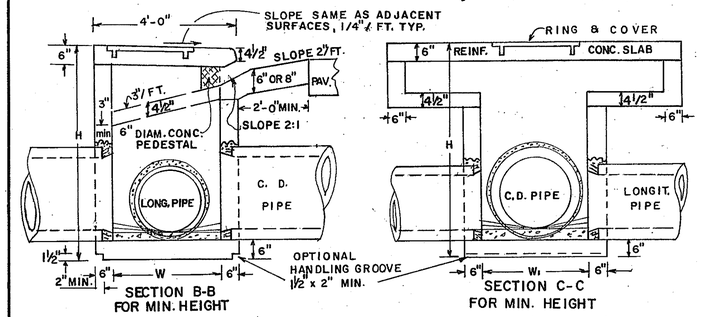

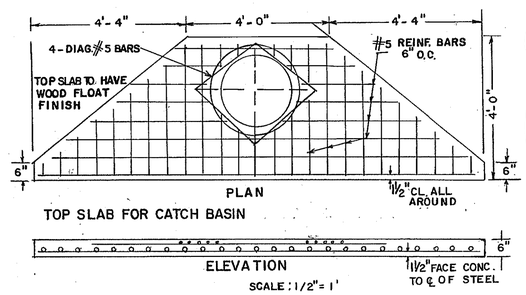

TOP SLAB FOR CATCH BASIN

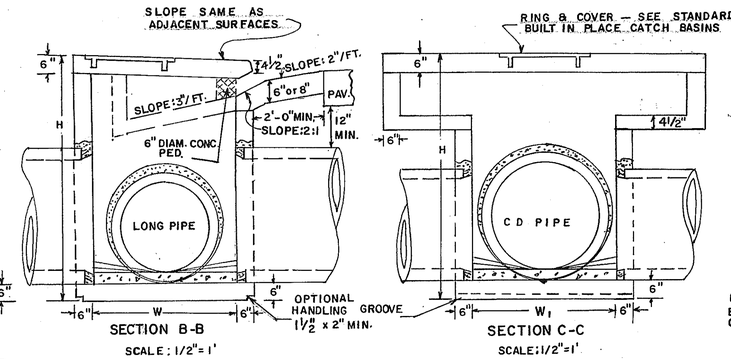

REINFORCING - ISOMETRIC VIEW

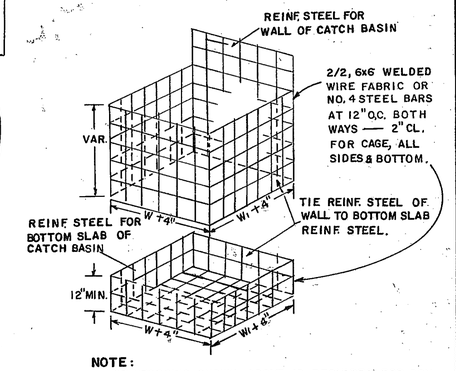

NOTE:
REINFORCING SHOWN ABOVE IS REQUIRED FOR BOX SHAPED BASIN. REINFORCING FOR CIRCULAR PRECAST ALTERNATE SHALL BE ACCORDING TO STD. 1040.

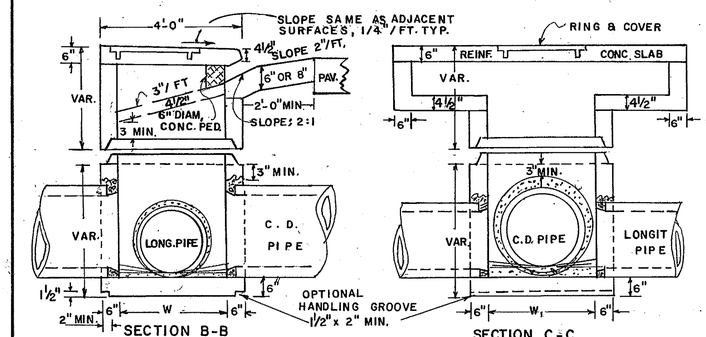

DETAIL AND ARRANGEMENT OF LADDER BARS

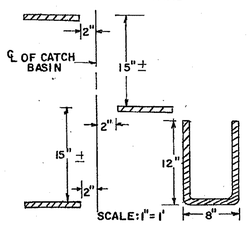

NOTE:
NUMBER AND LOCATION OF LADDER BARS IN CATCH BASIN TO BE AS DIRECTED BY THE ENGINEER.
M.H. STEPS LISTED IN GA. D.O.T. LABORATORY'S QUALIFIED PRODUCTS LIST MAY BE SUBSTITUTED.

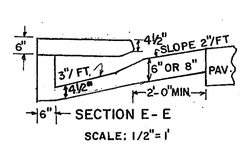

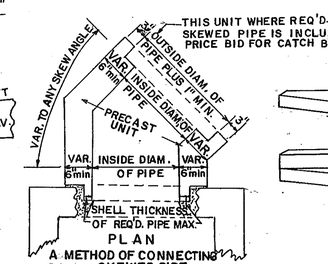

METHOD OF CONNECTING PIPE (WHERE CONC. PIPE HAS TO BE CUT)

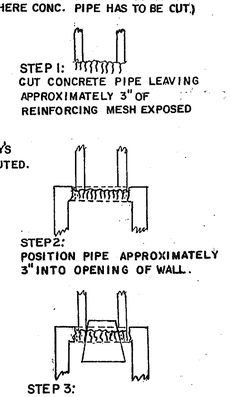

TYPICAL ISOMETRIC VIEW

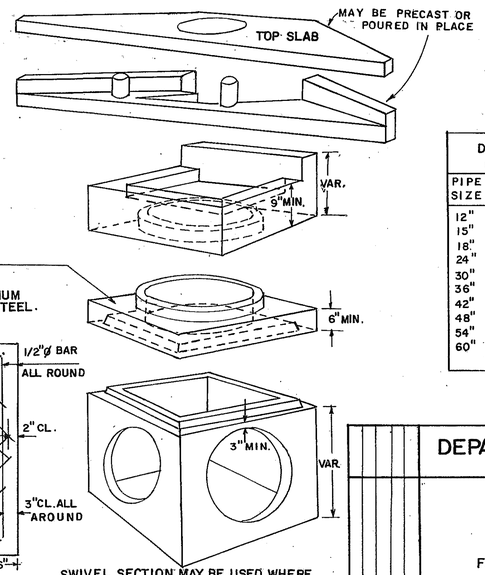

IF THIS SWIVEL SECTION SLAB IS USED TO REDUCE THE W AND W_1 DIMENSIONS, INCREASE THE MINIMUM THICKNESS TO 9" AND USE REINF. STEEL. SEE DETAIL BELOW.

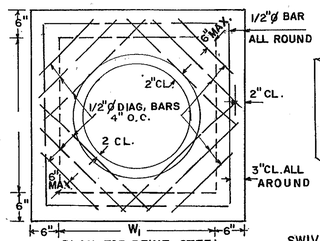

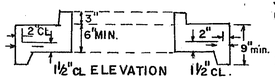

SWIVEL SECTION MAY BE USED WHERE SKEWED PIPE CONNECTS TO PRECAST CONCRETE BOX.

NO SCALE

NOTE:
THE ABOVE VIEW DEPICTS PRECAST BOX SEE SEPARATE STANDARDS FOR CIRCULAR ALTERNATE OR BUILT-IN-PLACE BOX.

DIMENSIONS FOR CATCH BASINS		
PIPE SIZE	NORMAL W or W_1	MIN. H
12"	3'-0"	4'-4"
15"	3'-0"	4'-7"
18"	3'-0"	4'-10"
24"	3'-0"	5'-6"
30"	3'-6"	6'-2"
36"	4'-0"	6'-10"
42"	5'-0"	7'-4"
48"	5'-0"	8'-0"
54"	6'-0"	8'-6"
60"	6'-0"	9'-2"

NOTE:
DIMENSIONS FOR CATCH BASINS ARE BASED UPON TYPICAL OUTSIDE DIAMETERS OF CONCRETE PIPES AND MAY BE VARIED IF CONDITIONS PERMIT AND THE ENGINEER APPROVES. W & W_1 DIMENSIONS DO NOT HAVE TO BE EQUAL.

ALTERNATE:
BUILT-IN-PLACE, PRECAST BOX, AND/OR PRECAST CIRCULAR UNITS WITH THE REQUIRED ADAPTERS, REDUCERS, FITTINGS, CONNECTIONS ETC. MAY BE USED IN COMBINATIONS.

NOTE:
FOR RING & COVER DETAILS AND OTHER DETAILS NOT SHOWN, SEE STANDARD 1034 D FOR BUILT-IN-PLACE CATCH BASIN.

ALL JOINTS BETWEEN PRECAST RISERS OR BETWEEN PRECAST BASE AND RISER WILL BE KEYED. KEYED JOINTS SHOWN ARE TYPICAL AND MAY BE VARIED.

DETAIL OF TOP SLAB, REINF. STEEL & CLEARANCES REQ'D.

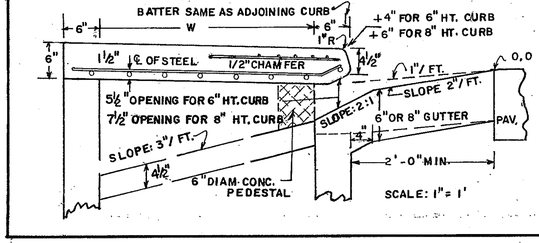

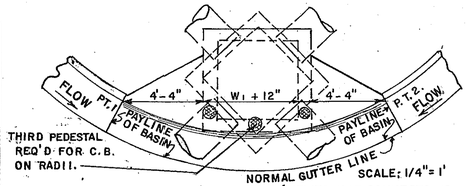

SWIVEL SECTION MAY BE USED WHERE SKEWED PIPE CONNECTS TO PRECAST CONCRETE BOX.
ALL DIMENSIONS ARE THE SAME AS SHOWN ON DETAILS FOR CATCH BASIN. DIMENSIONS FROM PT. 1 TO PT. 2 ARE MEASURED ALONG THE CHORD, UNIT PRICE BID FOR CATCH BASIN INCLUDES ALL CURB AND GUTTER FROM PT. 1 TO PT. 2.

DEPARTMENT OF TRANSPORTATION
STATE OF GEORGIA

STANDARD PRECAST CATCH BASINS

FOR USE WITH CURB (6" OR 8" HT.) & GUTTER (IN SAGS OR LOW POINTS)

SCALE AS SHOWN — REV. & REDR., SEPT. 1982

REV. & REDR. R.M.U.
TRA. G.M.E.
CHK. R.K.C.

(SUBMITTED) Floyd E. Hardy — STATE ROAD & AIR PORT DESIGN ENGR.
(APPROVED) Thomas D. Moseley — STATE HIGHWAY ENGINEER

NUMBER 1034D PRECAST

FORM EF3